INSTRUCTION AND PARTS BOOK – REV. A2

MEYER'S

HEAVY DUTY MANURE SPREADERS

Model: M3280

DO NOT - Operate This Spreader Until You Have Completely Read This Book!

NEVER - Repair or Clean This Spreader While PTO is Engaged!

Manufactured in DORCHESTER, WI by

MEYER'S EQUIPMENT Mfg. Corp.

MODEL SPECIFICATIONS	
Width of Box Inside	60” – 74”
Overall Width	116-1/2”
Length of Box Inside	190”
Depth	37-3/8”
Overall Length	22’ 10”
Overall Height	76”
Ground Clearance	13-1/2”
App. Capacity (Struck Cu. Ft.)	280
App. Capacity (Heaped Cu. Ft.)	430
App. Empty Weight (lbs.)	7300
Loading Height	63”
Apron Chain (Standard)	Twin #67P11
Beaters	Ø29” Bottom Beater w/ AR400 Bolt-On Paddles Ø14” Top Beater w/ Weld-On Paddles
Spindles	(4x) Ø3” Wheel Spindles
Spindle/Hub Load Rating	(4x) 7,500 lbs Each / 30,000 lbs Total
Tire Size (Standard)	425-65R x 22.5
Tire Size (Optional)	19L X 16.1 10 Ply Flotation
PTO Speed	540 RPM Standard 1000 RPM Optional
Min. Recommended Tractor Horsepower	100 HP
Min. Recommended Hydraulic Flow	12 GPM

INTRODUCTION

Congratulations on the purchase of your new Meyer's Manure Spreader!
With proper use and preventative maintenance, it will give you many years of trouble-free operation.

- At the front of this manual is a Product Registration and Inspection Certificate. Be sure your dealer has completed this certificate and forwarded a copy to the manufacturer to validate the manufacturer's warranty.
- The product model and serial number are recorded on this certificate for your convenience and for proper identification of your spreader by your dealer and the manufacturer when ordering repair parts.
- The serial number plate is found on the upper left front corner of the spreader box or stamped in the left channel at the front. For information on ordering repair parts, refer to the repair parts section of this manual. Orders must list the complete description, correct part number, and total amount required.
- All references to right hand and left hand apply to the product as viewed from the rear of the machine and facing the direction of forward travel.
- You are urged to study this manual and follow the instructions carefully. Your efforts will be repaid in better operation and service as well as a savings in time and repair expense. Failure to read this manual and understand the machine could lead to serious injury. If you do not understand instructions in this manual, contact either your dealer or Meyer's Equipment Manufacturing Corp.

This **SAFETY ALERT SYMBOL** means **ATTENTION! BE CAREFUL**! **YOUR SAFETY IS INVOLVED**! It stresses an attitude of **HEADS UP FOR SAFETY**. When you see this symbol, be alert to the possibility of **PERSONAL INJURY** and carefully read the message that follows.

WARNING:

NEVER OPERATE WITHOUT ALL COVERS, SHIELDS AND GUARDS IN PLACE. KEEP HANDS, FEET AND CLOTHING AWAY FROM MOVING PARTS. SOME COVERS AND GUARDS IN THIS MANUAL HAVE BEEN REMOVED FOR ILLUSTRATIVE PURPOSES ONLY. FAILURE TO HEED MAY RESULT IN SERIOUS PERSONAL INJURY OR DEATH.

MEMBER
FEMA
FARM EQUIPMENT MANUFACTURERS ASSOCIATION

Contact Information

Meyer's Equipment Mfg. Corp.
P.O. Box 406
Dorchester, WI 54425
Phone: (715)-654-5200
Fax: (715)-654-5558
Email: emcdorchester@tds.net

TABLE OF CONTENTS

INTRODUCTION **3**

SAFETY SYMBOLS **6**

SAFETY DECALS & LOCATIONS **6**

MANURE SPREADER SAFETY **10**

MANDATORY SAFETY SHUTDOWN PROCEDURE **11**

PRE-OPERATION **12**

GENERAL 12
TRACTOR HITCH AND PTO REQUIREMENTS 12
TRACTOR TOWING SIZE REQUIREMENTS 13
HYDRAULIC SYSTEM 13
Open and Closed Center Hydraulic Systems *14*
Spreader Setup *14*
TRACTOR HOOKUP 14

TRANSPORTING **15**

GENERAL 15
Safety Chain Use *15*
Highway Lights *15*

OPERATION **16**

LOADING 16
UNLOADING 17
UNHOOKING FROM TRACTOR 18

MAINTENANCE, ADJUSTMENTS, & LUBRICATION **18**

WHEEL & TIRE MAINTENANCE 18
Wheel Hub Lubrication *18*
Lock Ring Rim *18*
CLEANING AND STORAGE 19
ADJUSTMENTS 20
Apron Chain *20*
Roller Chains *20*
Front V-Belt Drive *20*
LUBRICATION 20

REPLACEMENT PARTS **22**

BOX PARTS & MISC. 22
FRONT BELT DRIVE & RELATED PARTS 24
SIDE SHAFT & RELATED PARTS 26
MAIN BEATER DRIVE & RELATED PARTS 28
TOP BEATER DRIVE & RELATED PARTS 30
BEATERS & RELATED PARTS 32
GEARBOX – BEATER DRIVE 34
APRON & RELATED PARTS 36
GEARBOX – APRON DRIVE 38
AXLES, WHEELS, SPINDLES & RELATED PARTS 40
HYDRAULIC END GATE & RELATED PARTS 42
PTO DRIVELINE ASSEMBLY w/ OVER-RUNNING CLUTCH 43
HIGHWAY LIGHTING AND WIRING 44
JACK ASSEMBLY & RELATED PARTS 45
HYDRAULIC SYSTEM PARTS – APRON DRIVE 46
HYDRAULIC SYSTEM PARTS – END GATE 48

LIMITED WARRANTY STATEMENT **50**

⚠ SAFETY SYMBOLS

A brief definition of signal words that may be used in this manual:

⚠ **DANGER:** Indicates an imminently hazardous situation that, if not avoided, will result in serious injury or death.

⚠ **WARNING:** Indicates a potentially hazardous situation that, if not avoided, could result in death or serious injury. Includes hazards that are exposed when guards are removed.

⚠ **CAUTION:** Indicates a potentially hazardous situation that, if not avoided, may result in minor or moderate injury.

⚠ SAFETY DECALS & LOCATIONS

***** REFERENCE PAGES 8 & 9 FOR DECAL LETTERS AND PART #'S***

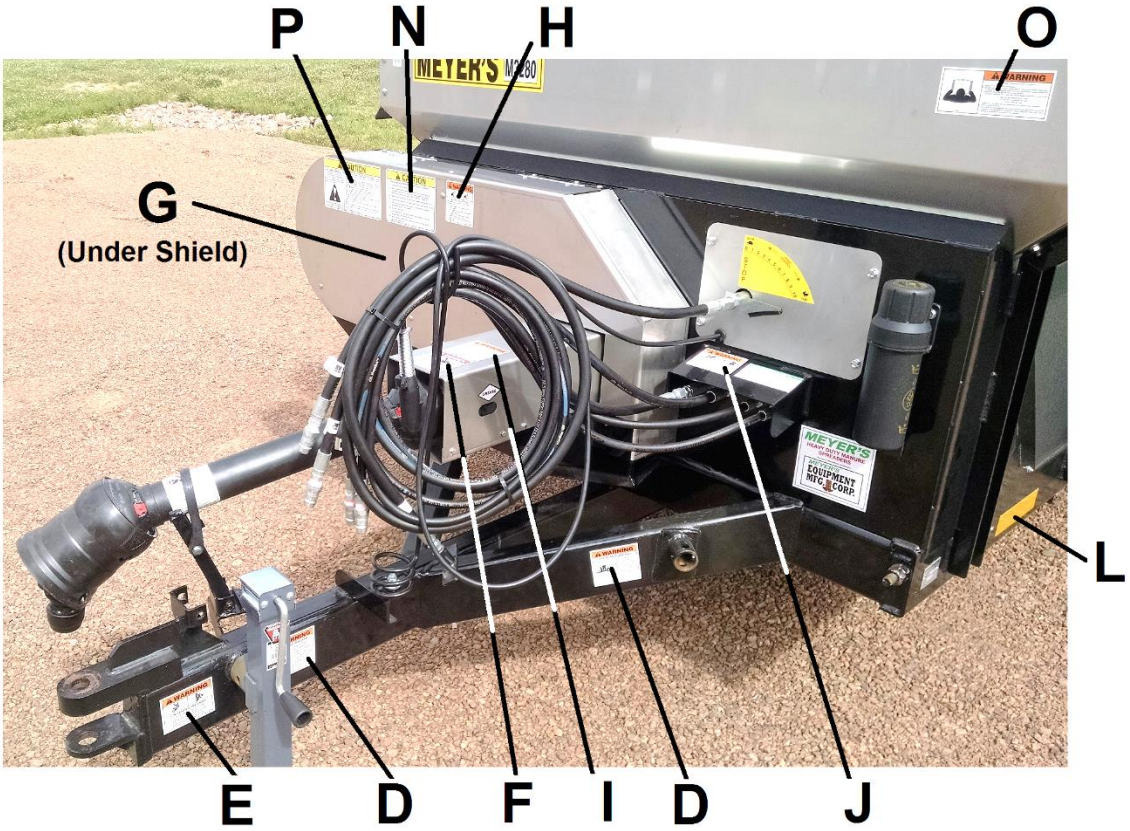

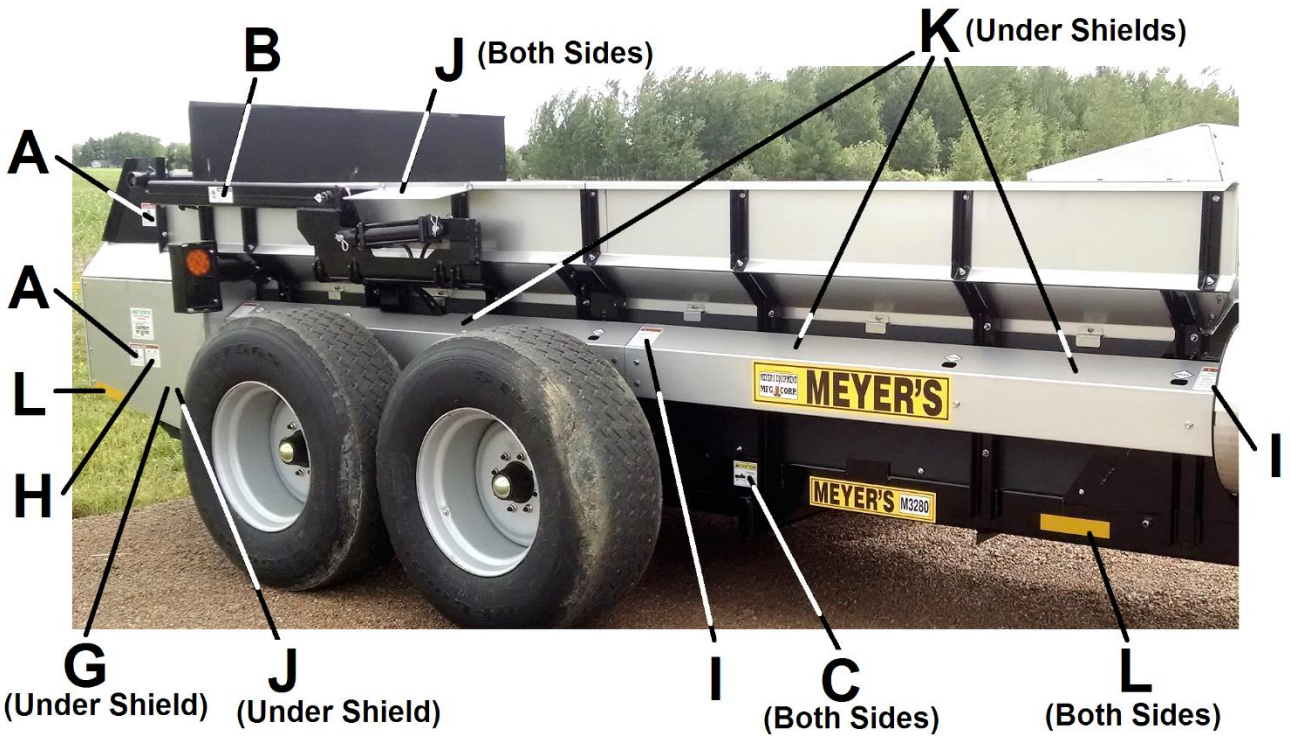

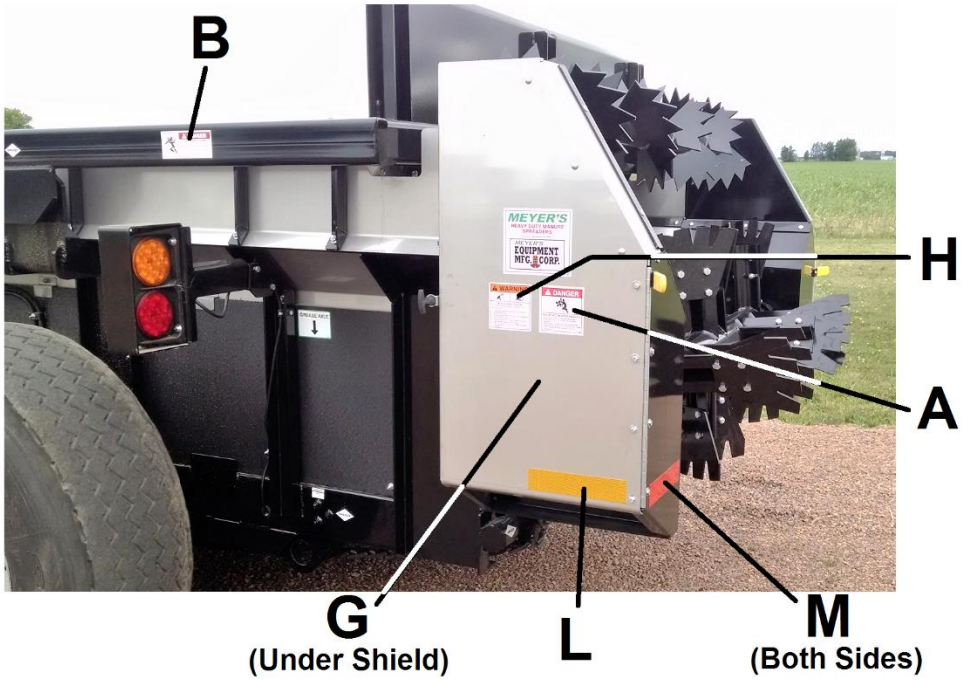

⚠ CAUTION

IF ANY SAFETY SIGN BECOMES UNREADABLE FOR ANY REASON, THE SIGN MUST BE REPLACED WITH A NEW SIGN. IF THE SPREADER IS REPAINTED, ALL SAFETY SIGNS MUST BE REPLACED. CONTACT YOUR DEALER OR MEYER'S EQUIPMENT MANUFACTURING CORP. IF YOU REQUIRE ANY SHIELD OR SIGNS FOR REPLACEMENT.

DECAL A – PART NO. 3000

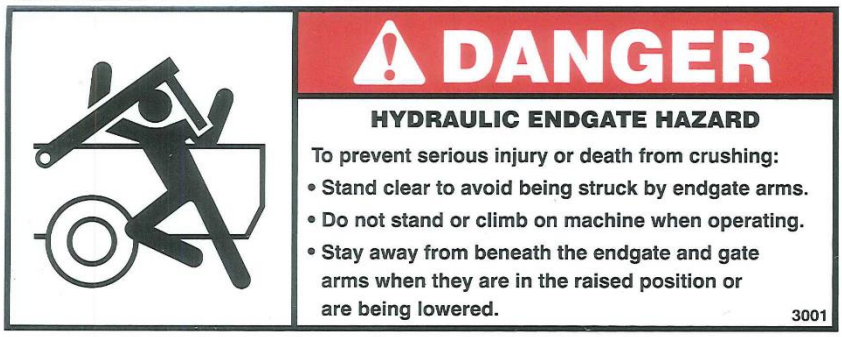

DECAL B – PART NO.3001

DECAL C – PART NO. 3002

DECAL D – PART NO. 3003

DECAL E – PART NO. 3004

DECAL F – PART NO. SW104
(1000 RPM – PART NO. SW105)

DECAL G – PART NO. SW104-1

DECAL H – PART NO. SW404

DECAL I – PART NO. SW406

DECAL J – PART NO. SW700

DECAL K – PART NO. SW102

REFLECTIVE TAPE – YELLOW
DECAL L
PART NO. PM17-5910

REFLECTIVE TAPE – RED
DECAL M
PART NO. PM17-5915

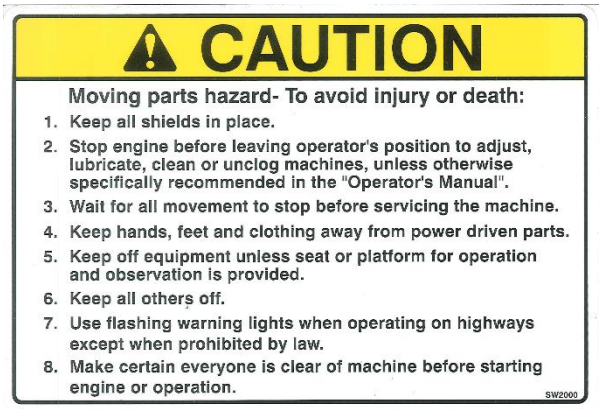

DECAL N – PART NO. SW2000

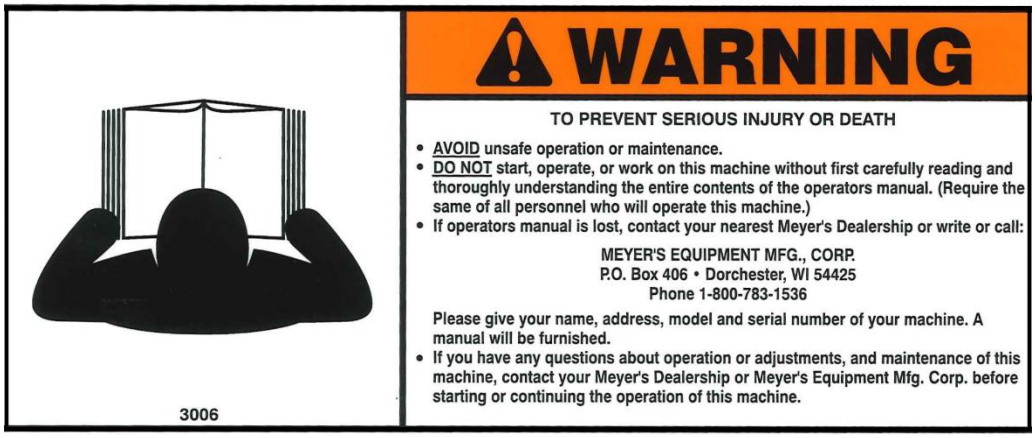

DECAL O – PART NO. 3006

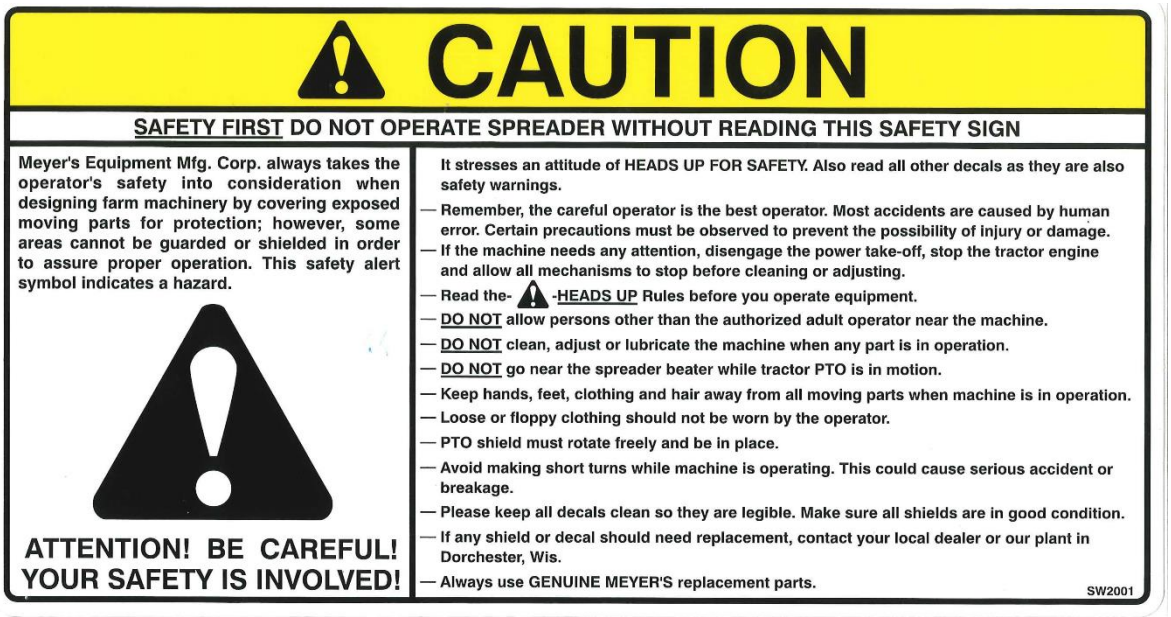

DECAL P – PART NO. SW2001

⚠ MANURE SPREADER SAFETY

⚠ CAUTION

THERE ARE INHERENT HAZARDS ASSOCIATED WITH THE OPERATION OF A MANURE SPREADER.

FOR YOUR SAFETY:

- Never Enter Spreader Box While In Operation For Any Reason.
- Only Properly Instructed People Should Operate The Spreader. Do Not Allow Children Or Inexperienced Persons To Operate Spreader.
- Keep All Guards and Shields In Place. Moving Parts Can Crush And Dismember.
- Clear The Area Before Equipment Start Up.
- Keep Hands, Feet, and Loose Clothing Away From Moving Parts.
- Do Not Go Near The Spreader Beaters While Machine Is Operating.
- Make Sure The PTO Is Securely Locked To Both The Tractor And Spreader Before Operating The Unit.
- Do Not Operate The PTO At Speeds Higher Than The Manufacturers Recommendations.
- Highway Traffic Is Not To Exceed 20 Mph. The Tires Supplied Are For Farm Use Only And Are Not Designed For Use Above This Speed Unless Equipped With High Speed Highway/Off-Road Farm Tires.
- Use Adequate Safety Chains When Towing The Spreader.
- The Use of a Slow moving Vehicle Sign Is Required on All Public Roads Unless Equipped with Flashing Hazard Lights. Obey All Applicable Highway Safety Laws And Rules.
- Always Use A Tractor Large Enough To Provide Sufficient Braking When Towing A Loaded Spreader.
- Use Caution When Traveling Over Uneven Terrain And When Approaching Stops.
- Do Not Load The Spreader Unless It Is Hitched To The Tractor.
- Do Not Unhitch A Loaded Spreader From The Tractor, Leaving It Supported By Only The Jack.
- Park Your Spreader on Level Ground and Place Blocks Ahead Of and Behind the Wheels Before Unhooking From Tractor To Avoid Unexpected Rolling When Separated From The Tractor.
- Do Not Allow Riders on Spreader.

FAILURE TO HEED MAY RESULT IN SERIOUS PERSONAL INJURY OR DEATH

⚠ CAUTION

THERE ARE ADDITIONAL HAZARDS ASSOCIATED WITH THE SERVICE AND MAINTENANCE OF YOUR SPREADER.

FOR YOUR SAFETY:

- Inspect When First Delivered And Regularly Thereafter; That All Connections And Bolts Are Tight And Secure Before Operating.
- Retighten All Wheel Bolts After The First Hour Of Towing. Check Periodically Thereafter. See Maintenance, Wheels.
- Maintain Proper Tire Air Pressure At All Times. See Maintenance, Tires.
- Always Wear Eye Protection When Operating Or Servicing Spreader.
- Be Sure All Movement Has Stopped, The PTO Is Disconnected, The Tractor Is Shut Off And The Ignition Key Is Removed Before Servicing The Spreader Or Components.
- Escaping Hydraulic Fluid Under Pressure Can Penetrate The Skin And Cause Serious Injury. Relieve All Pressure From The Hydraulic System Before Connecting Or Disconnecting The Lines Or Making Repairs. Check All Hoses and Fittings Before Start-up and Periodically During Operation.
- Never Make Any Alterations Or Modifications To This Equipment.

FAILURE TO HEED MAY RESULT IN SERIOUS PERSONAL INJURY OR DEATH

⚠ MANDATORY SAFETY SHUTDOWN PROCEDURE

BEFORE unclogging, cleaning, adjusting, lubricating or servicing the unit:

1. Disengage the tractor PTO.
2. Shut off the tractor engine, remove the ignition key and take it with you.
3. Wait for all movement to stop.
4. Remove the Telescoping PTO Drive and ALL power connections from the tractor.

ONLY when you have taken these precautions can you be sure it is safe to proceed. Failure to follow the above procedure could lead to death or serious bodily injury.

BEFORE ATTEMPTING TO OPERATE YOUR NEW SPREADER BE SURE TO READ THIS OWNERS MANUAL AND FAMILIARIZE YOURSELF WITH THE MACHINE!! OBSERVE THE PRECAUTIONS IN THIS MANUAL FOR SAFE OPERATION OF THIS MACHINE!!

Most farm accidents, like industrial, home and highway accidents, are caused by the failure of some individuals to observe simple and fundamental safety rules or precautions. For this reason farm accidents, just as other types of accidents, can be prevented by recognizing the causes of accidents and doing something about them before an accident occurs.

Regardless of the care used in the design and construction of farm equipment, there are many points that cannot be completely safe-guarded without interfering with accessibility and efficient operation.

A careful operator is the best insurance against an accident.

The complete observance of one simple rule would prevent thousands of serious injuries each year. That rule is:

"NEVER ATTEMPT TO CLEAN, OIL, OR ADJUST A MACHINE WHILE IN MOTION".

-NATIONAL SAFETY COUNCIL

PRE-OPERATION

GENERAL

Read the entire Owner's Manual before attempting to operate this manure spreader. Before attempting any maintenance or repairs; always be sure all rotating parts have stopped and that the tractor is shut off. Disconnect the PTO, relieve all hydraulic pressure and disconnect hydraulic hoses.

⚠WARNING

NEVER OPERATE SPREADER WITH ANY GUARDS OR SHIELDS REMOVED.
FAILURE TO HEED MAY RESULT IN SERIOUS PERSONAL UNJURY OR DEATH.

1. Completely lubricate the unit as described in the LUBRICATION Section.
2. Check and tighten the wheel lug nuts if required.
3. Check and maintain the tire pressure according to the manufacturer's recommendation.
4. Check the entire unit for loose bolts, damaged or loose hydraulic fittings and hoses or other damaged parts.
5. The tractor half of the PTO drive shaft assembly must be locked securely to the tractor output shaft.

TRACTOR HITCH AND PTO REQUIREMENTS

This spreader is designed to be operated by a 540 RPM PTO Output. (540 RPM Standard / 1000 RPM Optional).

The PTO drive shaft assembly is designed to operate with tractors conforming to the industry standard shown on Figure 1. The telescoping PTO driveline must have a 5" minimum sleeve overlap when connected.

ADMA Recommendations:

A tractor drawbar equipped with a clevis hitch (hammer-strap) can cause interference with the PTO driveline IID (implement input driveline). This interference can cause serious damage to the IID or the IID telescoping members. The clevis hitch on the tractor must be removed.

If the implement (figure 2, top view) is attached to a tractor with a clevis hitch (hammer-strap) style drawbar, the hammer-strap must be removed to prevent damage to the IID guarding or the IID telescoping members.

If the implement (figure 2, lower view) is attached to a tractor with an offset in the drawbar, be certain it is in the down position to prevent damage to the IID guarding or the IID telescoping members.

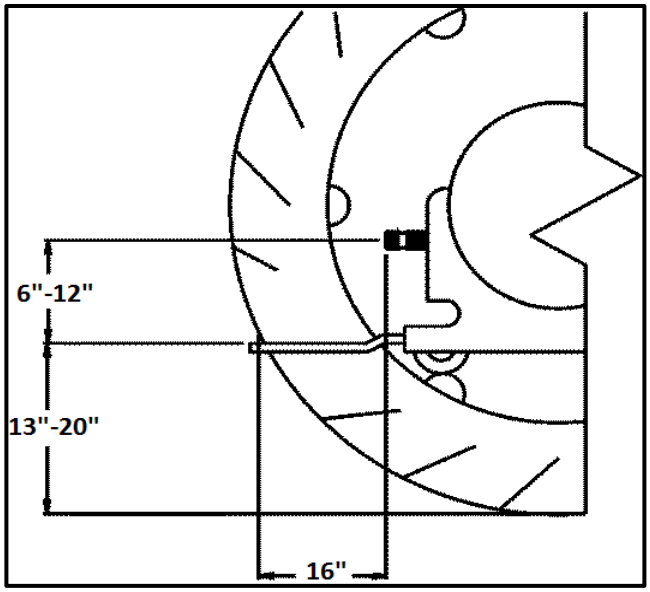

FIGURE 1. TRACTOR DRAWBAR & PTO SPECIFICATION

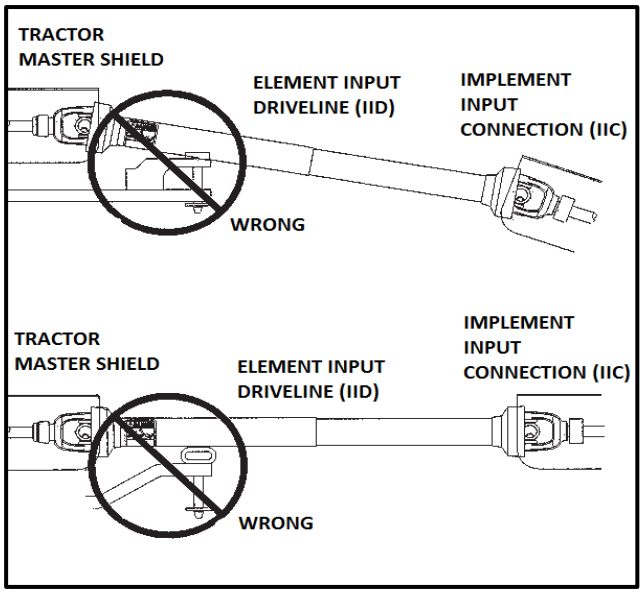

FIGURE 2. PTO ALIGNMENT

TRACTOR TOWING SIZE REQUIREMENTS

The spreader does not have brakes, towing the spreader must be done safely. The ASAE (American Society of Agricultural Engineers) specifies that the towing vehicle should weigh at least 2/3 as much as the loaded implement to be reasonably safe towing at speeds up to 20 mph. This (20 mph) is also the maximum recommended towing speed for the spreader.

The loaded weight of your spreader will naturally vary with the moisture of the manure and you must consider that for your conditions. The loaded weight as specified by the spreader manufacturer is as follows:

Use the following charts for calculating spreader gross weight and minimum tractor weight:

Calculations	
Load Weight	Capacity (ft^3) x Material Weight (lbs. / ft^3) = Load Weight
Spreader Gross Weight	Empty Weight (7300 lbs) + Load Weight = Gross Weight
Minimum Tractor Weight	Spreader Gross Weight x (2/3) = Min Tractor Weight

LOAD TYPE	**M3280 CAPACITY**
Struck Level	280 ft^3
Heaped	430 ft^3

ESTIMATED WEIGHTS PER CUBIC FOOT	
Material	**LBS / FT^3**
Lime Sludge	110-115 LBS.
Dry Feedlot Manure	63-65 LBS.
Chicken Litter	63-65 LBS.
Cake Sludge	62-65 LBS.
Semi-Solid Manure	58-60 LBS.
Pen Packed Manure	30-35 LBS.
Liquid Manure	63-65 LBS.

EXAMPLE

A heaped load of pen packed manure:
Load Weight = 430 x 35 = 15,050 LBS
Gross Weight = 7,200 + 15,050 = 22,250 LBS
Tractor Weight = 22,250 x (2/3) = 14,833 LBS

NOTICE!

HEAPED LOADS HAVE SIGNIFICANTLY HIGHER CAPACITIES RESULTING IN INCREASED WEIGHT AND HIGHER CENTER OF GRAVITY, REQUIRING EXTRA PRECAUTION DURING OPERATION.

HYDRAULIC SYSTEM

There are two hydraulic circuits on the spreader:

1. One circuit powers the hydraulic end gate.
2. The second circuit powers the hydraulic apron drive. A check valve is installed in this circuit to prevent operating the apron in reverse.

Therefore, the tractor requires two sets of remote ports with a minimum recommended flow of 12 GPM.

The spreader comes standard with a Manual Flow Control system for operating the apron. The system has an adjustable flow control valve on the spreader which is manually controlled by twisting the "control hose."

The hose is connected to the flow control valve on the spreader and the opposite end of the hose is fitted with a handle to operate from the tractor seat. The flow control lever on the spreader has a tension screw adjustment to regulate force to retain settings. See Figure 3 on Page 14.

Open and Closed Center Hydraulic Systems

- Most late model tractors use a Closed Center hydraulic system with a variable displacement pump which only pumps oil as required. This system is commonly CCLS (Closed Center Load Sensing), also known as PFC (Pressure and Flow Compensated).

- Other tractors may have an Open Center hydraulic system with a fixed displacement pump which pumps oil continuously. This type of system typically does not have adjustable flow control from the tractor cab.

Spreader Setup

See Figure 3.

- The spreader, with its standard Manual Flow Control system, may be used for all types of hydraulic systems by opening or closing the ball valve located on the return port of the adjustable flow control valve.

- If your tractor does not have adjustable flow control, the ball valve must be open, allowing excess flow to return to the tractor. Apron speed should be regulated using the equipped "twist hose".

- If your tractor has adjustable flow control, the ball valve should be closed. You may move the flow control valve to max speed and use the tension screw to lock it in place. You may also opt to remove the "twist hose" as hydraulic flow / apron speed can already be adjusted from the tractor.

- A secondary flow control valve on the spreader regulates apron speed and limits the flow to 7.5 GPM. Excess flow is returned to the tractor.

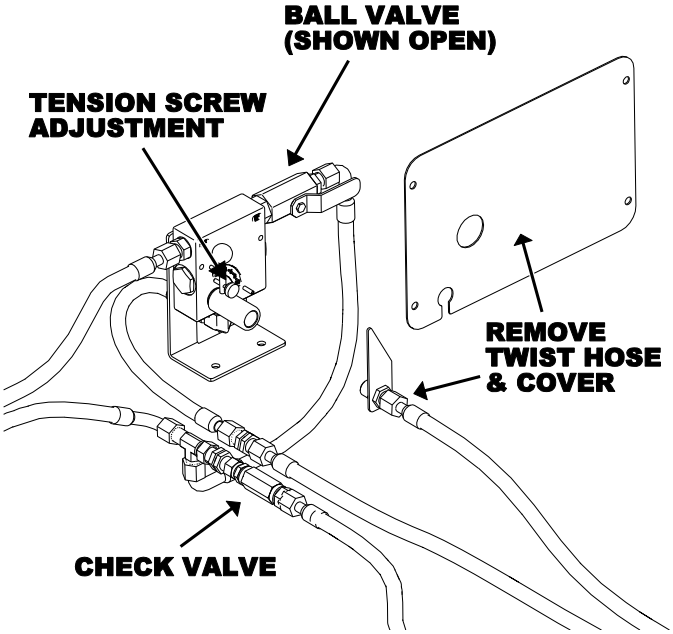

FIGURE 3. APRON FLOW CONTROL

TRACTOR HOOKUP

1. **SLOWLY** back up tractor to spreader and line up draw pin holes.
2. Shift tractor to neutral or park and set the brakes.
3. Hook the spreader hitch to the tractor drawbar with 1 3/8" secured hitch pin.
4. Raise the jack off the ground. Remove the jack hub pin and rotate the jack to the horizontal position or move to secondary storage location and secure with the pin.
5. Connect the PTO drive shaft to the tractor PTO output shaft and be sure it is locked to the tractor PTO shaft.
6. Connect the electrical plug for the lights to a receptacle on the tractor.
7. Run the "twist hose" for controlling apron speed to the tractor cab where it can be operated.
8. Connect the hydraulic hoses from the spreader to paired remote ports on the tractor.

   Apron Drive – (2x) 8M3K Ø1/2" ID Hoses Hydraulic Gate – (2x) 6M3K Ø3/8" ID Hoses

NOTICE! The spreader apron circuit has a check valve in it so that the apron may not be operated in the wrong direction. If the hoses are reversed, the apron will not operate and the hoses should be switched.

TRANSPORTING

GENERAL

⚠CAUTION

REGULARLY CLEAN OFF THE REFLECTIVE TAPE AT THE REAR AND SIDES OF THE SPREADER WHEN TRANSPORTING IT ON THE HIGHWAY.

⚠WARNING

DO NOT TOW AT SPEEDS GREATER THAN 20 MPH. FAILURE TO HEED MAY RESULT IN SERIOUS PERSONAL INJURY OR DEATH.

While towing the spreader, check for traffic constantly. Be sure you can see that no one is attempting to pass you and that all traffic is sufficiently clear from you before making any turns.

Operating speed is dictated by the terrain over which you are traveling. Always use caution. Avoid traveling on slopes or hills that are unsafe. Also beware of slippery conditions such as traveling over areas previously spread with manure. If possible, avoid spreading over areas where manure has been previously applied.

If you will travel on public roadways and it is legal to do so, you must know all rules governing such operation. This will include lighting and brake requirements in addition to traffic rules. You may also be required to install a safety chain on the spreader.

Safety Chain Use

A safety chain should be installed when traveling on public roads. The chain must be strong enough to hold the weight of the loaded spreader. If using a grab hook at the end(s) of the chain to secure the chain to itself, a hook latch must be installed. The length of the safety chain is not to be any longer than necessary to turn without interference. If any chain links or attachment hardware are broken or stretched, repair before using. Store chain so it does not corrode or become damaged. Do not use this chain for other implements because the strength and length of chain may not be adequate. Identify this chain for use on this particular spreader.

⚠CAUTION

A SAFETY CHAIN SHOULD BE INSTALLED TO RETAIN THE CONNECTION BETWEEN TRACTOR (OR OTHER TOWING VEHICLE) AND SPREADER WHENEVER TRAVELING ON PUBLIC ROADS. A SUGGESTED ATTACHMENT IS ILLUSTRATED. FIGURE 4.

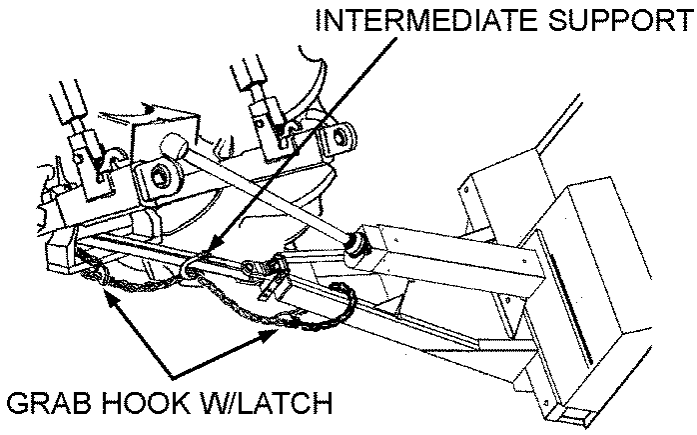

FIGURE 4. SAFETY CHAIN INSTALLATION

Highway Lights

The spreader comes standard with highway lights. Lights are recommended for any spreader operated on public roadways and may be required by law. Be sure to plug the electrical plug into the tractor receptacle when hooking up the spreader. Clean lights as needed to maintain visibility!

If your tractor does not have a receptacle for the electrical plug, then a SMV (Slow Moving Vehicle) sign must be installed at the rear of the spreader.

NOTICE! The 7-Pin Plug is wired for separate turn and brake signals. Some vehicles may use the same wire for turn and brake signals. In this case, the brake function will use the amber lights instead of the red lights. If towing behind a vehicle with this wiring setup, a converter should be used to separate the turn and brake signals.

OPERATION

⚠DANGER

NEVER ENTER THE SPREADER BOX FOR ANY REASON WITHOUT FIRST DISCONNECTING PTO SHAFT FROM TRACTOR. DO NOT ALLOW OTHERS IN THE BOX. ROTATING BEATER CAN DISMEMBER OR KILL.

⚠CAUTION

DO NOT USE JACK EXCEPT WHEN SPREADER IS EMPTY. JACK WILL NOT SUPPORT ADDED WEIGHT FROM LOAD. UNBALANCED WEIGHT MAY RESULT IN UNEXPECTED "TIP UP" OF THE SPREADER.

LOADING

1. Check that the hydraulic end gate is closed, Figure 5.
2. Park spreader for loading, shift the tractor to neutral or park and set the brakes.
3. Load manure into spreader EVENLY. Loading manure unevenly may cause tip-up or excessive hitch weight.
4. Approach spreader slowly and take care while maneuvering. Do not collide the bucket or loader with spreader.
5. Solid manure may be loaded at least level with the top of the box while semi liquid and liquid slurries will have to be less than full in the spreader box. It is unlawful to allow slurry or splash to leak onto public roads!

⚠ WARNING

BE SAFE WHEN LOADING! IF LOADING WITH A SKID STEER, CARRY LOADS LOW UNTIL YOU REACH THE SPREADER. APPROACH SPREADER SLOWLY. EXCESSIVE SPEED AND / OR SUDDEN STOPS MAY CAUSE SKID STEER TO TIP OVER!

FIGURE 5. HYDRAULIC END GATE

UNLOADING

The rear beaters have been designed and tested to provide the best spread pattern for most liquids and semi-solid manure. However, the pattern will vary for each specific condition. The factors that contribute most to differing patterns will be moisture content and the amount and length of bedding material. For most typical conditions, the spread pattern should be uniform and about the width of the spreader. Plan your spreading patterns so you do not have to travel over previously spread manure which will be slippery, resulting in poor traction. Traction on wet grass is also poor. When the resulting pattern may require that you overlap during spreading, use precautions on slopes and hills where you will experience a loss of traction by traveling over ground with previously spread manure.

⚠DANGER

KEEP AWAY AND KEEP OTHERS CLEAR OF ROTATING BEATERS AT REAR OF SPREADER. SERIOUS INJURY OR AMPUTATION COULD RESULT.

⚠WARNING

MAKE CERTAIN EVERYONE IS CLEAR OF EQUIPMENT BEFORE APPLYING POWER. FAILURE TO HEED MAY RESULT IN SERIOUS PERSONAL INJURY OR DEATH.

⚠CAUTION

DO NOT OPERATE APRON CHAIN WITHOUT RAISING END GATE FIRST. FAILURE TO HEED MAY RESULT IN EQUIPMENT DAMAGE.

⚠WARNING

DO NOT OPERATE SPREADER WITH ANY GUARD OPEN OR MISSING. ROTATING PARTS CAN DISMEMBER OR KILL.

When you are ready to begin spreading application on the field:

1. Slowly engage the tractor PTO clutch and increase RPM to proper PTO operating speed.
2. Open the hydraulic end gate, Figure 7, by applying the tractor hydraulic lever. This can be done while traveling forward to avoid a heavier application at the edge of the field than desired.
3. Once the end gate is open and the PTO is up to speed, engage the hydraulic apron.
   - For manual flow control systems, regulate apron speed using the “twist hose” control. Turn handle CW to increase apron speed or CCW to decrease.
   - For tractor operated flow control, the flow control on the spreader should be set to max speed. Adjust apron speed using tractor lever or other controls.
4. For solid manure, start the apron at a slow rate of speed.
5. Start application onto the field. Increase the speed of apron chain for a heavier application.

   NOTICE! Do not feed frozen manure at a rate too fast. The apron drive may feed faster than the beaters can expel the material. When frozen chunks are present, reduce apron speed to approximately 1/3, to allow the beaters time to grind the chunks into small pieces.
6. Further control of the application rate is possible by the relationship of tractor engine speed to ground speed (transmission gear selection). For optimum trouble free performance it is recommended to operate at or near engine PTO speed.

⚠WARNING

AS THE SPREADER NEARS EMPTY, DEBRIS THAT IS NORMALLY BLOCKED BY THE LOAD MAY FLY FORWARD TOWARD THE TRACTOR. LOWER HYDRAULIC END GATE AS NEEDED TO BLOCK DEBRIS FROM BEING THROWN FORWARD. FAILURE TO HEED MAY RESULT IN SERIOUS PERSONAL INJURY OR DEATH.

7. When the spreader is empty, stop the PTO. A clattering noise may be heard coming from the over-running clutch, this is normal as the beaters coast to a stop.
8. Stop the apron chain so there is no chain slat under the hydraulic end gate, then close the end gate.

UNHOOKING FROM TRACTOR

1. Park the spreader, set tractor parking brake, and turn off all power.
2. Park your spreader on level ground and place blocks ahead of and behind the wheels.
3. Remove jack pin and move to vertical position, raise jack until hitch is not resting on tractor drawbar.
4. DO NOT UNHITCH A LOADED SPREADER LEAVING IT SUPPORTED BY ONLY THE JACK!
5. Disconnect the PTO shaft, hydraulic hoses, electrical plug, and safety chain. Remove pin.

MAINTENANCE, ADJUSTMENTS, & LUBRICATION

⚠ *MANDATORY SAFETY SHUTDOWN PROCEDURE*

BEFORE unclogging, cleaning, adjusting, lubricating or servicing the unit:

1. Disengage the tractor PTO.
2. Shut off the tractor engine, remove the ignition key and take it with you.
3. Wait for all movement to stop.
4. Remove the Telescoping PTO Drive and ALL power connections from the tractor.

ONLY when you have taken these precautions can you be sure it is safe to proceed. Failure to follow the above procedure could lead to death or serious bodily injury.

WHEEL & TIRE MAINTENANCE

WHEELS: Check after first hour of towing and periodically thereafter. The wheel studs should be torqued to 170 foot pounds in a crisscross pattern.

TIRE PRESSURE: 425-65R Recommended Pressure: 45 - 90 PSI MAX

Wheel Hub Lubrication

Remove the wheels and hubs annually. Clean out old grease and repack bearing cones with quality EP grease. Put a ¼" film of grease on the bearing cups and reassemble. If your hubs have grease zerks, do not lube them. Grease builds up in the hub and will eventually damage the seal when expansion from heat occurs.

Lock Ring Rim

Removing, replacing and repairing industrial tires and rims with lock rings can be dangerous without proper tools, equipment and training to perform this service. It is recommended that this work be performed only by a qualified tire repair shop.

⚠WARNING

NEVER INFLATE BEYOND RIM OR TIRE MANUFACTURER'S APPROVED PSI RATING. WHILE INFLATING, STAY OUT OF THE TRAJECTORY & STAND CLEAR OF TIRE/WHEEL ASSEMBLY. A TIRE BLOW OUT OR RIM/WHEEL FAILURE CAN CAUSE SERIOUS INJURY OR DEATH.

⚠ DANGER

IF THE LOCK RING SHOULD BLOW OFF, IT AND OTHER PARTS COULD FLY OFF WITH ENOUGH FORCE TO INJURE OR KILL A PERSON. NEVER STAND IN THE POTENTIAL BLOW OUT AREA AND KEEP OTHERS AWAY.

CLEANING AND STORAGE

Before storing this spreader for an extended period of time, perform the following:

1. Allow the spreader to completely clean out the last load.

2. Thoroughly hose off all manure from the outside of the spreader and the inside of the box, particularly getting the end gate mechanism clean. The water can be drained into your manure storage pit or if the gate is left closed, the water can be taken to the field and spread.

3. If pressure washing spreader, be careful not to wash directly on or too close to any bearing seals. The high pressure can destroy the seal and force water into the bearing causing it to rust and fail. Avoid pressure washing painted areas of the spreader too closely as the pressure can strip paint on scratched areas.

4. Manure is very acidic and should not be left on painted areas for a long period of time because it will lift paint from the metal. Unpainted metal will corrode causing holes to rust through metal guards or even fall off the machine. If this should happen, guards must be replaced immediately.

5. After cleaning, lube the spreader to exclude moisture from bearings and prevent condensation from forming during storage.

6. Inspect all elements and check for parts that need repair or replacement. Performing these tasks now will guarantee that the spreader is ready for use at the beginning of the next season.

ADJUSTMENTS

Apron Chain

A1. The apron chain is adjusted by (4) adjuster screws located on the front of the box frame. Adjust the screws until the chain is sagging approximately 5" below the frame at the chain's lowest point. When there is no more adjustment left on the adjuster screws, loosen the nuts on the screws and push the screws in as far as they will go. Then remove a link from each chain and readjust the apron chain.

NOTICE! Tightener screws need to be adjusted equally in order for chain to run centered on front rollers.

Roller Chains

A2. The main beater drive chain is tensioned by a spring-loaded idler. Periodically check tension. Spring should be stretched approximately 1-1/2" to 2" (9-1/2" – 10" Total Length). Adjust anchor bolt if more tension is needed. Check that the tensioner arm is able to move freely.

A3. The upper beater drive chain is tensioned by a spring-loaded idler. Periodically check tension. Spring should be stretched approximately 1-1/2" to 2" (6-1/2" – 7" Total Length). Adjust anchor bolt if more tension is needed. Check that the tensioner arm is able to move freely.

Front V-Belt Drive

A4. -Check front V-Belt tension frequently during first 24-48 hours of operation and periodically thereafter. The belt is automatically tensioned by a spring loaded idler. Check that arm is able to move freely. Spring should be stretched approximately 1-1/2" to 2" (9-1/2" – 10" Total Length).

-Inspect and clean belt of foreign material which may cause slippage. Never apply belt dressing as this will damage the belt and cause early failure.

LUBRICATION

NOTICE! Spreader must be sitting level for an accurate oil check. To check oil levels, park spreader on level ground and use jack to raise / lower the spreader until it is completely level.

L1. Maintain oil level and quality in apron drive gear reducer at the check level plug / sight glass. When required, drain and refill with SAE 85-140 EP gear lube or Synthetic SAE 75-90 gear lube. (5.7 qt.)

L2. Maintain oil level and quality in beater drive gear box at the check level plug / sight glass. When required, drain and refill with SAE 85W-140 Synthetic gear lube. (1.4 qt. / 45 fl. oz.)

L3. Grease front input shaft bearings. 2 locations: LH side of Input Shaft / PTO shield. 1 pump every 8 hours.

L4. Grease side shaft bearings. 6 locations: 1 in Front Drive Case, 5 along RH side. 1 pump every 8 hours.

L5. Grease apron shaft bearings. 3 locations: 1 at each end of apron shaft on outer bearing housings. Center bearing by remote grease line on LH side of spreader. 1 pump every 8 hours.

L6. Grease beater shaft bearings. 4 locations: 1 at each end of both the top and bottom beaters.

L7. Oil roller chains with light weight machine oil. Oil should be applied every 8 hours or as often as necessary to prevent the bearing area of the chain from becoming dry.

L8. Grease Axle Shafts. 2 locations on each side of spreader by remote lines. 10 pumps every 8 hours.

L9. Grease Gate Pivot Bolts. 1 on each side of spreader. 2 pumps every 8 hours.

L10. Grease the Over-Running Clutch by slot on LH Side of Input Shaft / PTO Shield. 3-4 pumps every 8 hours.

L11. Lubricate the PTO Drive Shaft Assembly. See Instructions on Page 21.

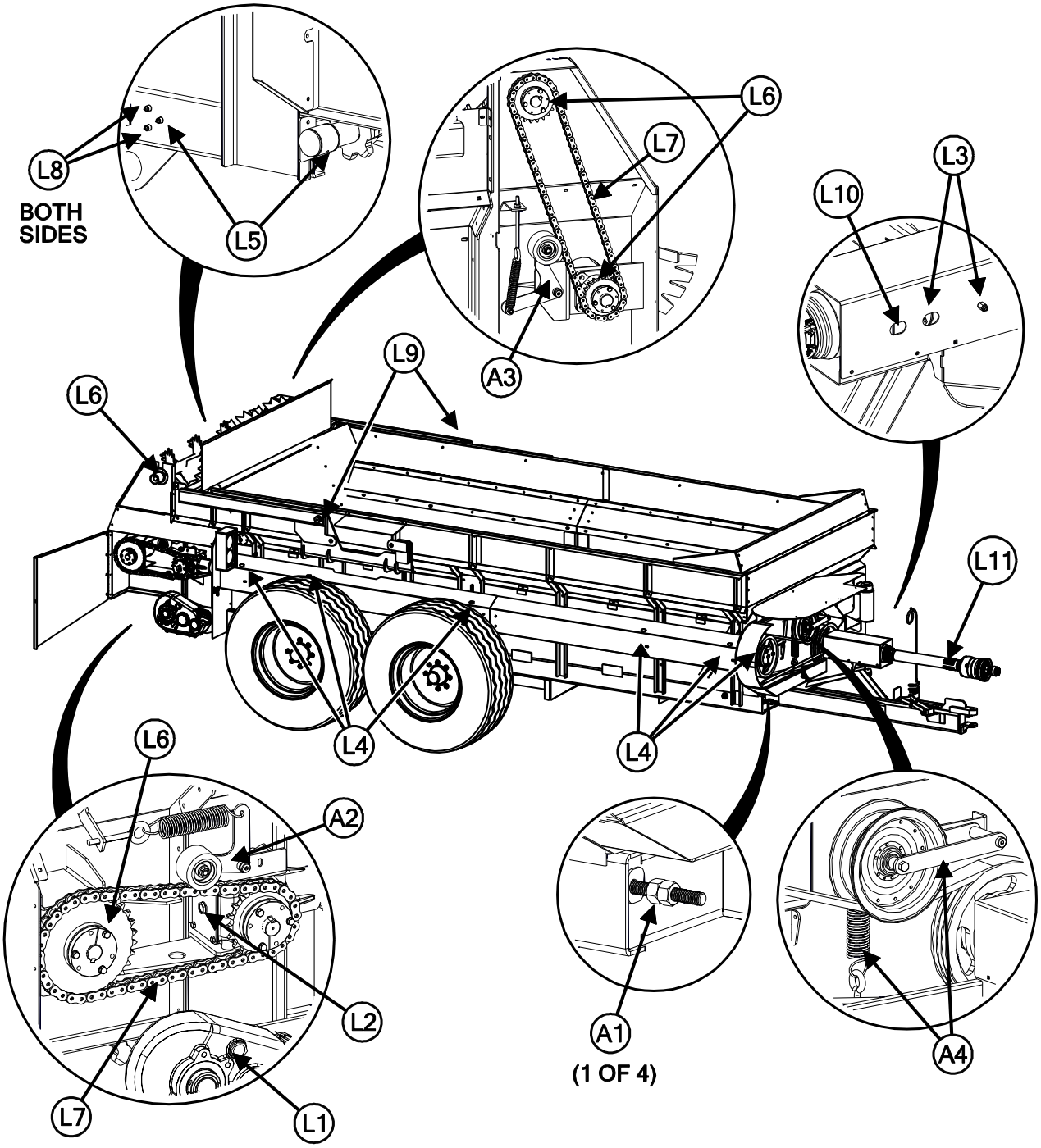
L8
BOTH SIDES
L5
L6
L7
A3
L3
L10
L9
L6
L4
L4
L11
L6
A2
L2
L7
L1
A1
(1 OF 4)
A4

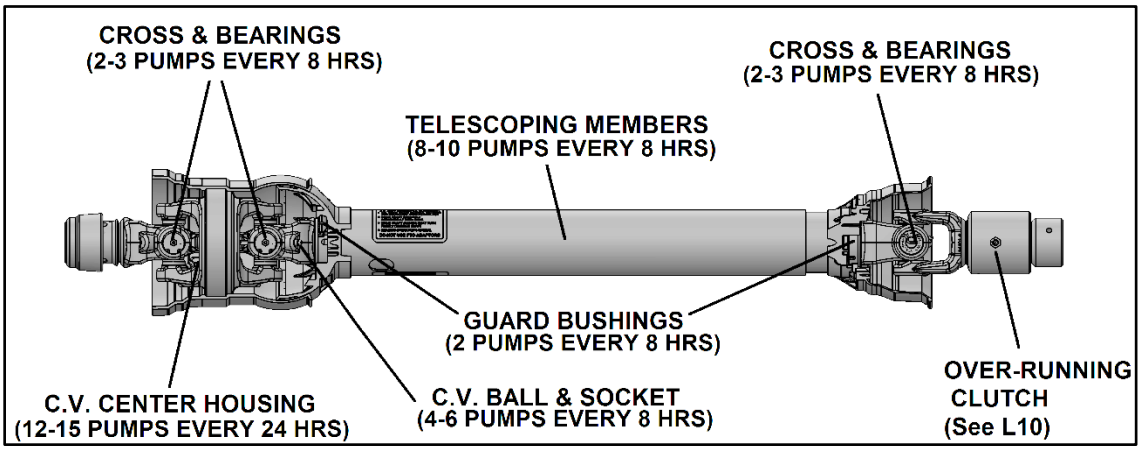
CROSS & BEARINGS
(2-3 PUMPS EVERY 8 HRS)
CROSS & BEARINGS
(2-3 PUMPS EVERY 8 HRS)
TELESCOPING MEMBERS
(8-10 PUMPS EVERY 8 HRS)
GUARD BUSHINGS
(2 PUMPS EVERY 8 HRS)
C.V. CENTER HOUSING
(12-15 PUMPS EVERY 24 HRS)
C.V. BALL & SOCKET
(4-6 PUMPS EVERY 8 HRS)
OVER-RUNNING
CLUTCH
(See L10)

REPLACEMENT PARTS

BOX PARTS & MISC.

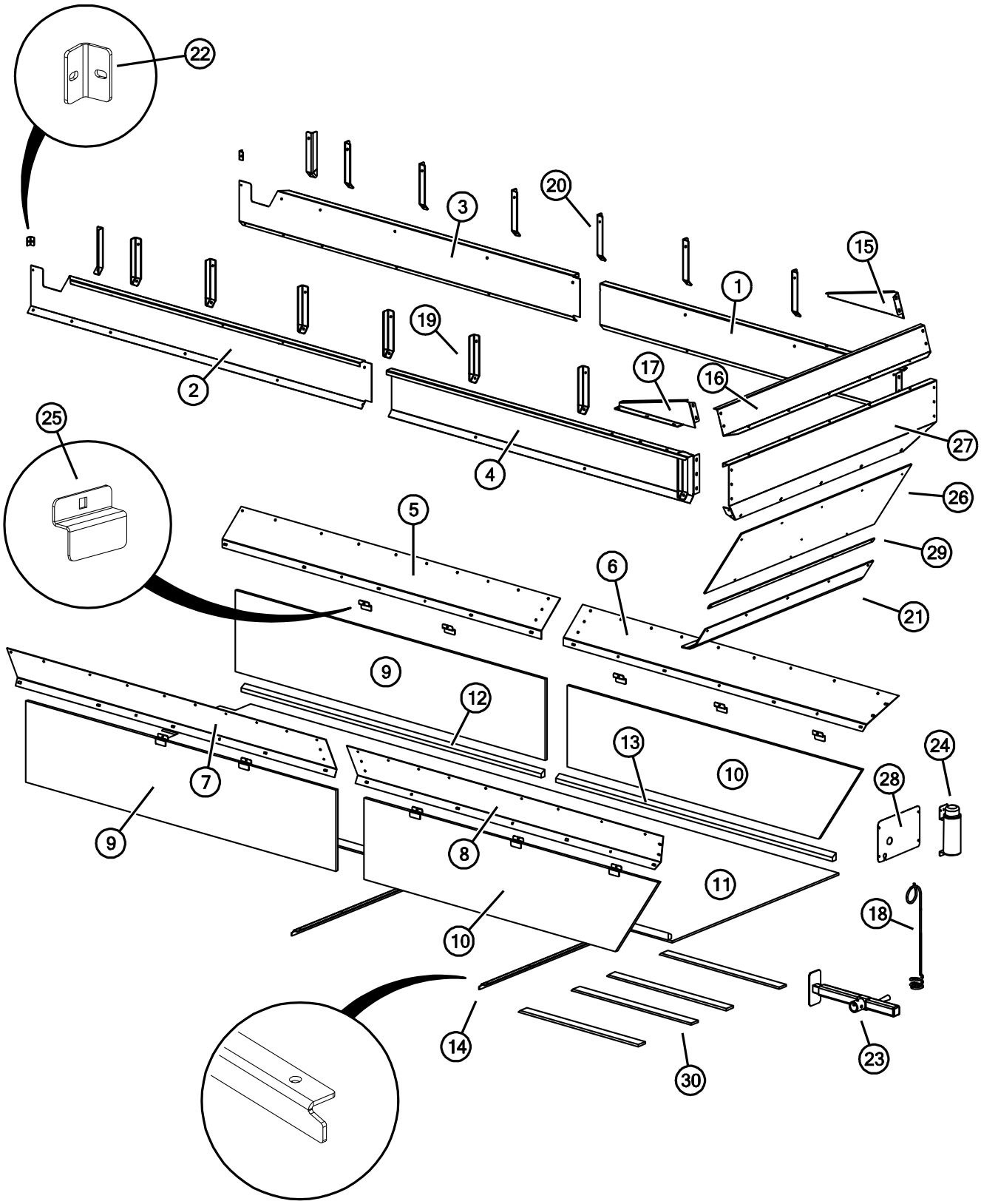

BOX PARTS & MISC.

KEY	PART NO.	QTY.	DESCRIPTION
1	E01733-435	1	EXTENSION, LH FRONT HALF
2	E01762-435	1	EXTENSION, RH BACK HALF
3	E01763-435	1	EXTENSION, LH BACK HALF
4	E01767-435	1	EXTENSION, RH FRONT HALF
5	E30092B	1	SIDE FLARE, LH BACK HALF
6	E30092F	1	SIDE FLARE, LH FRONT HALF
7	E30093B	1	SIDE FLARE, RH BACK HALF
8	E30093F	1	SIDE FLARE, RH FRONT HALF
9	E01082-15B	2	SIDE PANEL, POLY, BACK HALF
10	E01082-15F	2	SIDE PANEL, POLY, FRONT HALF
11	E01086-435	1	FLOOR, POLY, COMPLETE
12	E01121-10B	2	FLOOR CHAIN SPACER, POLY, BACK HALF
13	E01121-10F	2	FLOOR CHAIN SPACER, POLY, FRONT HALF
14	225-435-2	2	FLOOR HOLD DOWN
15	435-10	1	SPLASH PAN SIDE, LH
16	435-11	1	SPLASH PAN, FRONT
17	435-9	1	SPLASH PAN SIDE, RH
18	E00026	1	HYDRAULIC HOSE HOLDER
19	E01124-435	8	EXTENSION BRACE, RH
20	E01125-435	8	EXTENSION BRACE, LH
21	E01737-16	1	BELTING, FRONT PANEL, 12” x 60”
22	E01844	2	BOLT BRACKET, 90°
23	E01956	1	JACK ASSEMBLY, COMPLETE, 5000 LB (See Separate Listing)
24	E21650	1	MANUAL HOLDER
25	E30083	10	SIDE PANEL RETAINER, OUTER
26	E30099-16	1	FRONT POLY INSERT
27	E30110	1	EXTENSION, FRONT
28	E30265	1	COVER, FLOW CONTROL VALVE
29	SP123	1	BELT HOLD DOWN, FRONT PANEL
30	435-48	4	APRON SLIDE STRIP, POLY, 36”

FRONT BELT DRIVE & RELATED PARTS

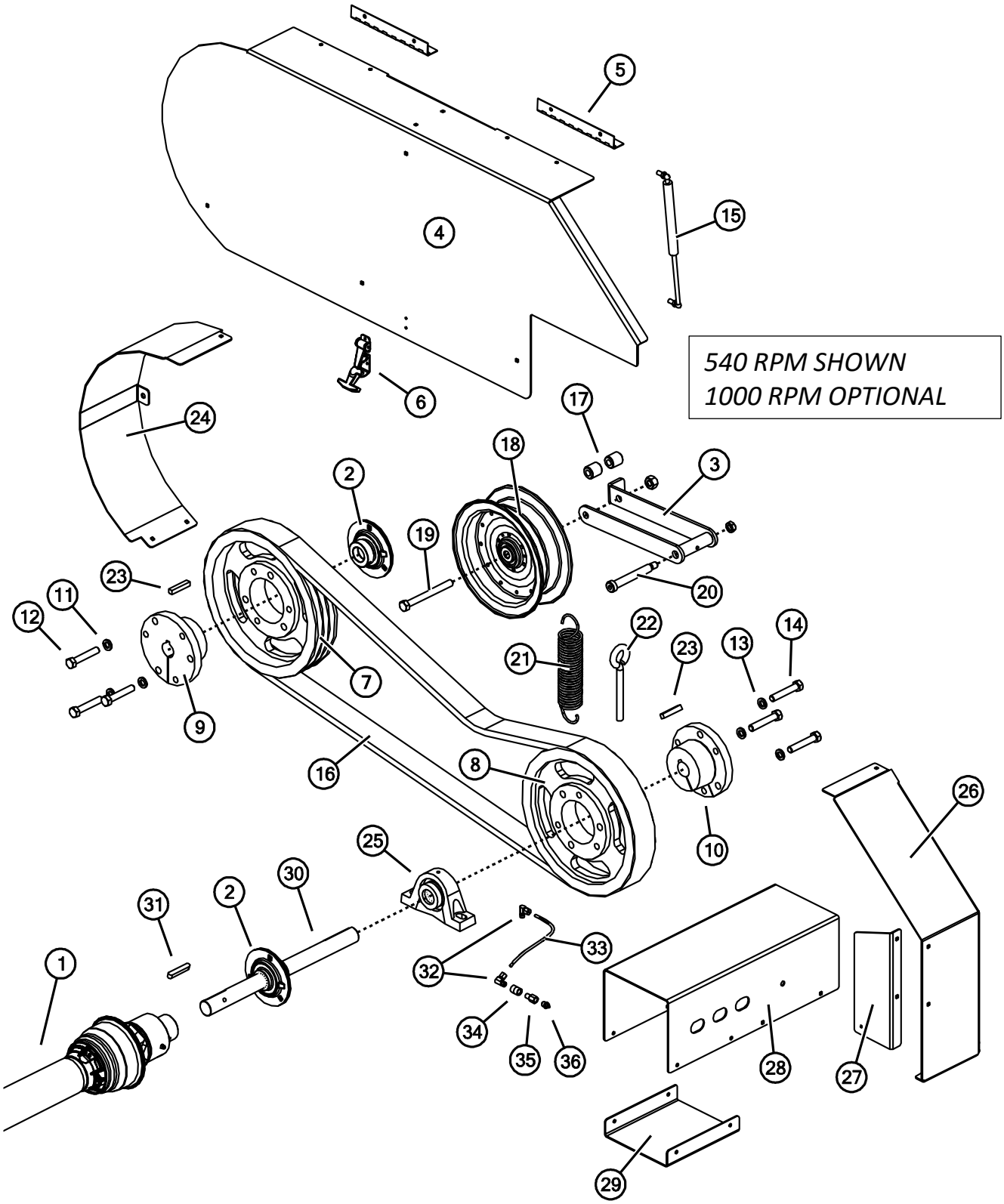

FRONT BELT DRIVE & RELATED PARTS

KEY	PART NO.	QTY.	DESCRIPTION
1	REF	1	PTO DRIVELINE ASSEMBLY (See Separate Listing)
2	E01803	2	BEARING ASSEMBLY w/ FLANGES, Ø1-1/4" x 72MM
	E01806	-	BEARING, Ø1-1/4", 72MM OD, G1104KRRB
	E01804	-	BEARING FLANGE, 72MM, GREASE ZERK
	E01805	-	BEARING FLANGE, 72MM, PLAIN
3	E30267	1	BELT TENSIONER ARM WELDMENT, R10
4	E30260	1	FRONT DOOR ASSEMBLY, w/ BRACE & SPRING MOUNT
5	E20942	2	HINGE, 2" x 8-1/2"L
6	E00016	1	LATCH ASSEMBLY
7	E30275	1	QD SHEAVE, 3-5V 1250 E **(540 RPM)**
	E30270	1	QD SHEAVE, 3-5V 1600 E **(1000 RPM)**
8	E30275	1	QD SHEAVE, 3-5V 1250 E **(540 RPM)**
	E30271	1	QD SHEAVE, 3-5V 900 SF **(1000 RPM)**
9	E20939-04	1	QD BUSHING, TYPE E, Ø1-1/4"
10	E20939-04	1	QD BUSHING, TYPE E, Ø1-1/4" **(540 RPM)**
	E20939	1	QD BUSHING, TYPE SF, Ø1-1/4" **(1000 RPM)**
11	REF	3	WASHER, SPLIT LOCK, Ø1/2"
12	REF	3	BOLT, Ø1/2"-13 x 2-3/4", GR5
13	REF	3	WASHER, SPLIT LOCK, E BUSHING- Ø1/2" / SF BUSHING- Ø3/8"
14	REF	3	BOLT, GR5, E BUSHING- Ø1/2" / SF BUSHING- Ø3/8"
15	E30326	1	GAS SPRING (DOOR LIFT) ASSEMBLY w/ BALL STUDS
16	E30325	1	BELT, FRONT DRIVE, 3/5VX1120 **(540 & 1000 RPM)**
17	E20945	2	SPACER BUSHING
18	E00311-04	1	PULLEY, FRONT IDLER
19	REF	1	BOLT, Ø1/2"-13 x 5", GR5
20	E20944-04	1	SHOULDER BOLT, TENSION ARM, 4"
21	E00313-03	1	SPRING, EXTENSION, 1-3/4" x 8"
22	42265	1	EYE BOLT, Ø1/2" x 5"
23	E00316	2	KEY, 3/8" x 3/8" x 2"
24	E30259	1	FRONT CASE SHIELD, RH RADIUS
25	E00209	1	BEARING ASSEMBLY, RAS Ø1-1/4"
26	E30263	1	FRONT CASE SHIELD, LH
27	E30323	1	FRONT CASE SHIELD, LH FRONT
28	E30264	1	FRONT DRIVE SHAFT SHIELD
29	E30229	1	PTO SHIELD, BOTTOM
30	E30274	1	FRONT DRIVE SHAFT, Ø1-1/4" x 16-1/2"L
31	E02009	1	KEY, 3/8" x 3/8" x 2-1/4"L
32	VB-00031	2	BCMP 90° ELBOW, 3/16"T x 1/8"NPT, 440455-131280
33	REF	1	COPPER TUBING, Ø3/16" x 8"L
34	66270	1	COUPLING, 1/8"NPT BLK
35	E30328	1	ADAPTER, 1/8" Male NPT x 1/8"Female NPT, 69896
36	60102	1	GREASE ZERK, 1/8" NPT

SIDE SHAFT & RELATED PARTS

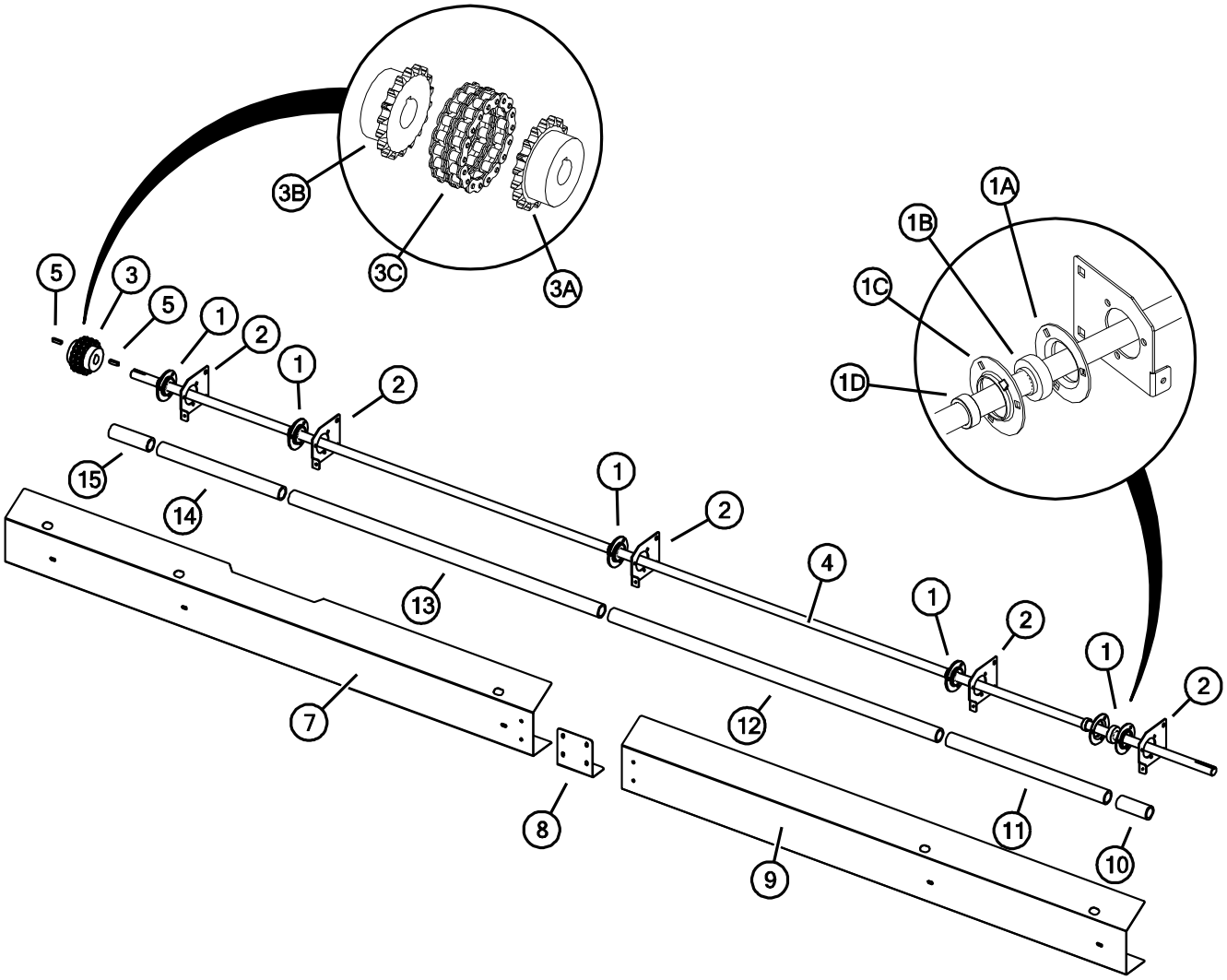

SIDE SHAFT & RELATED PARTS

KEY	PART NO.	QTY.	DESCRIPTION
1	E01786	5	BEARING ASSEMBLY w/ FLANGES, Ø1-1/4" x 62MM
1A	E01784	-	BEARING FLANGE, 62MM, PLAIN
1B	E01782	-	BEARING, GRA103RRB2, Ø1-1/4", 62MM OD
1C	E01780	-	BEARING FLANGE, 62MM, GREASE ZERK
1D	REF	-	COLLAR (Not Sold Separately)
2	E30269	5	BEARING MOUNT PLATE, FIXED
3	E00197-04	1	CHAIN COUPLER, COMPLETE, 6018
3A	EMC-31	-	CHAIN COUPLER SPROCKET, 6018, Ø1-1/4" BORE
3B	EMC-42	-	CHAIN COUPLER SPROCKET, 6018, Ø1-1/2" BORE
3C	NA8093	-	CHAIN, 6018
4	E30272	1	SIDE SHAFT, Ø1-1/4" x 184"L
5	E01181	2	KEY, 3/8" x 3/8" x 1-1/2"
7	E30257B	1	SIDE SHAFT SHIELD, BACK HALF
8	E30258	1	SPLICE BRACKET, SIDE SHAFT SHIELD
9	E30257F	1	SIDE SHAFT SHIELD, FRONT HALF
10	E30331-1	1	SHAFT GUARD, 5"
11	E30331-2	1	SHAFT GUARD, 26-7/8"
12	E30331-3	1	SHAFT GUARD, 55-3/4"
13	E30331-4	1	SHAFT GUARD, 52-5/8"
14	E30331-5	1	SHAFT GUARD, 20-5/8"
15	E30331-6	1	SHAFT GUARD, 6-1/2"

MAIN BEATER DRIVE & RELATED PARTS

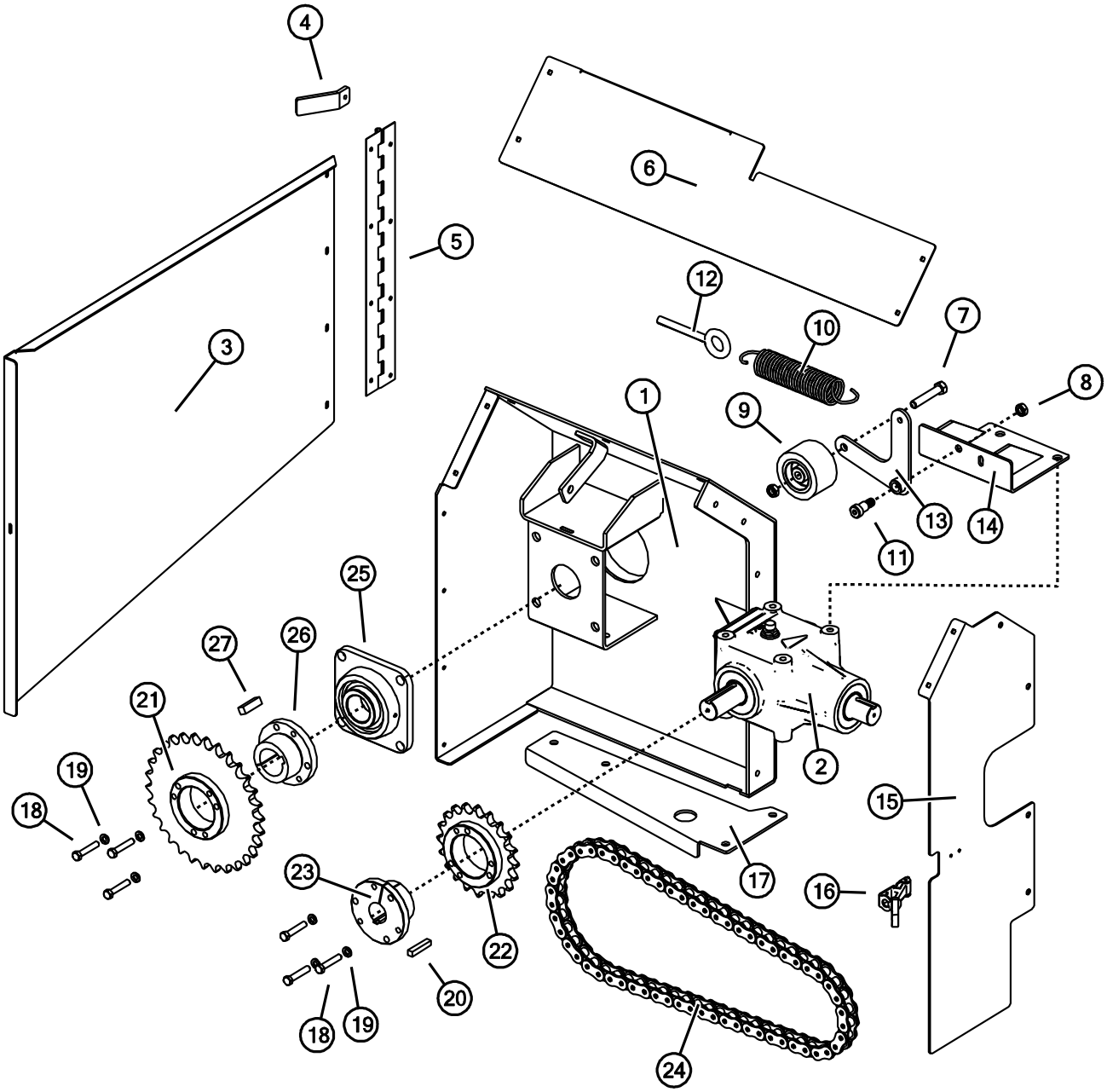

MAIN BEATER DRIVE & RELATED PARTS

KEY	PART NO.	QTY.	DESCRIPTION
1	E30231R	1	BEATER BRACKET ASSEMBLY, RH
2	E30160	1	GEARBOX, COMPLETE, RA70-17750 (See Separate Listing)
3	E30253	1	DOOR, RH CASE
4	E01274	1	DOOR STOP
5	E01273	1	HINGE, 3” x 20”
6	E30255	1	TOP SHIELD, RH CASE
7	REF	1	HCS, Ø1/2”-13 x 2-3/4”, GR5
8	REF	2	NUT, Ø1/2”-13 JAM NYLOCK
9	E00311-00	1	CHAIN TENSION ROLLER, Ø1/2” BORE, RUBBER
10	E00313-03	1	SPRING, EXTENSION, 1-3/4” x 8”
11	E20944	1	SHOULDER BOLT, TENSION ARM
12	E22743	1	EYE BOLT, Ø1/2” x 4”
13	E30245	1	TENSIONER ARM w/ BUSHING, R5
14	E21041-04	1	TIGHTENER MOUNT WELDMENT
15	E30254	1	FRONT SHIELD, RH CASE
16	E00016	1	LATCH ASSEMBLY
17	E30239	1	CHAIN PULL BRACE, RH CASE
18	REF	6	HCS, Ø3/8”-16 x 2”, GR5
19	REF	6	WASHER, SPLIT LOCK, Ø3/8”
20	E00316	1	KEY, 3/8” x 3/8” x 2”
21	E20828-04	1	SPROCKET, 80SF30
22	E210391-04	1	SPROCKET, 80SF20
23	E21040-04	1	QD BUSHING, SF 1-1/2”
24	E30247	1	ROLLER CHAIN, #80, 60 PITCH
25	E00261-07	1	BEARING ASSEMBLY, SCJ 2”
26	E20834	1	QD BUSHING, SF 2”
27	E30142	1	KEY, 1/2” x 1/2" x 1-3/4”

TOP BEATER DRIVE & RELATED PARTS

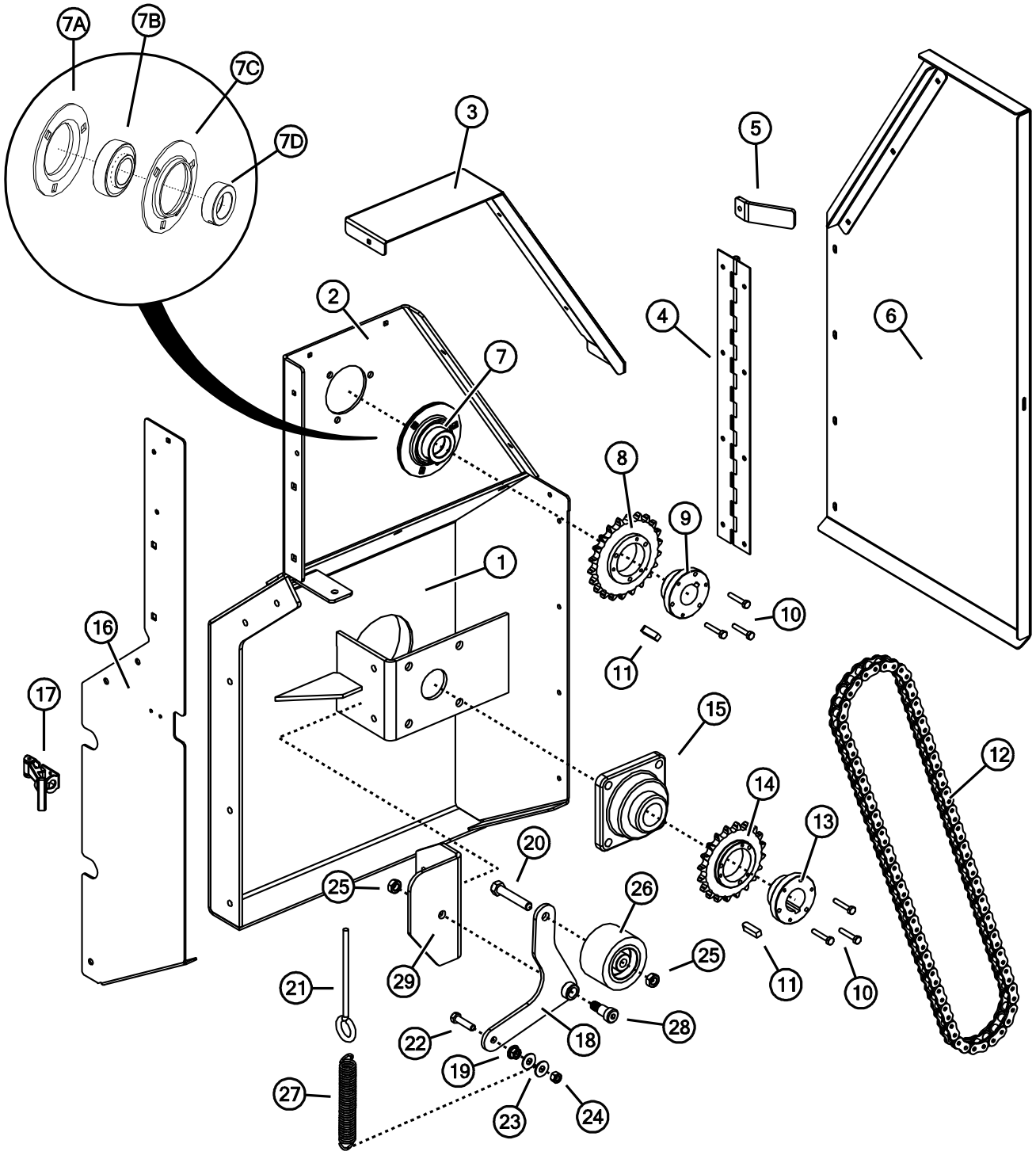

TOP BEATER DRIVE & RELATED PARTS

KEY	PART NO.	QTY.	DESCRIPTION
1	E30231L	1	BEATER BRACKET ASSEMBLY, LH
2	E30240L	1	TOP BEATER BRACKET, LH
3	E30252	1	TOP SHIELD, LH CASE w/ TOP BEATER
4	E01273	1	HINGE, 3" x 20"
5	E01274	1	DOOR STOP
6	E30332	1	DOOR w/ BRACE, LH CASE
7	E01973	1	BEARING ASSEMBLY w/ FLANGES, Ø1-3/8" x 72MM
7A	E01805	-	BEARING FLANGE, 72MM, PLAIN
7B	E01977	-	BEARING, GRA106RRB, Ø1-3/8", 72MM OD
7C	E01804	-	BEARING FLANGE, 72MM, GREASE ZERK
7D	REF	-	COLLAR (Not Sold Separately)
8	E01972-10	1	SPROCKET, QD-60SDS22H
9	E02138	1	BUSHING, QD-SDS-1-3/8 S
10	REF	6	HCS, Ø1/4"-20 x 1-1/2", GR5
11	E01774	2	KEY, 3/8" x 3/8" x 1-3/8"
12	E30248	1	ROLLER CHAIN, #60, 90 PITCH
13	E02139	1	BUSHING, QD-SDS-1-1/2
14	E02132-10	1	SPROCKET, QD-60SDS20H
15	E02131	1	BEARING ASSEMBLY, TCJ 1-1/2"
16	E30251	1	FRONT SHIELD, LH CASE w/ TOP BEATER
17	E00016	1	LATCH ASSEMBLY
18	E30243	1	TENSIONER ARM w/ BUSHING, R6
19	REF	1	NUT, Ø3/8"-16, FLG LK
20	REF	1	HCS, Ø1/2-13 x 2-3/4", GR5
21	REF	1	EYE BOLT, Ø3/8"-16 x 6-1/4"
22	REF	1	HCS, Ø3/8"-16 x 1-1/2", GR5
23	REF	2	WASHER, Ø3/8" FLAT
24	REF	1	NUT, Ø3/8"-16, NYLOCK
25	REF	1	NUT, Ø1/2"-13, JAM NYLOCK
26	E00311-00	1	CHAIN TENSION ROLLER, Ø1/2" BORE, RUBBER
27	E00313	1	SPRING, EXTENSION, 1" x 5"
28	E20944	1	SHOULDER BOLT, TENSION ARM
29	E30242	1	TENSIONER MOUNT, BOLT-ON

BEATERS & RELATED PARTS

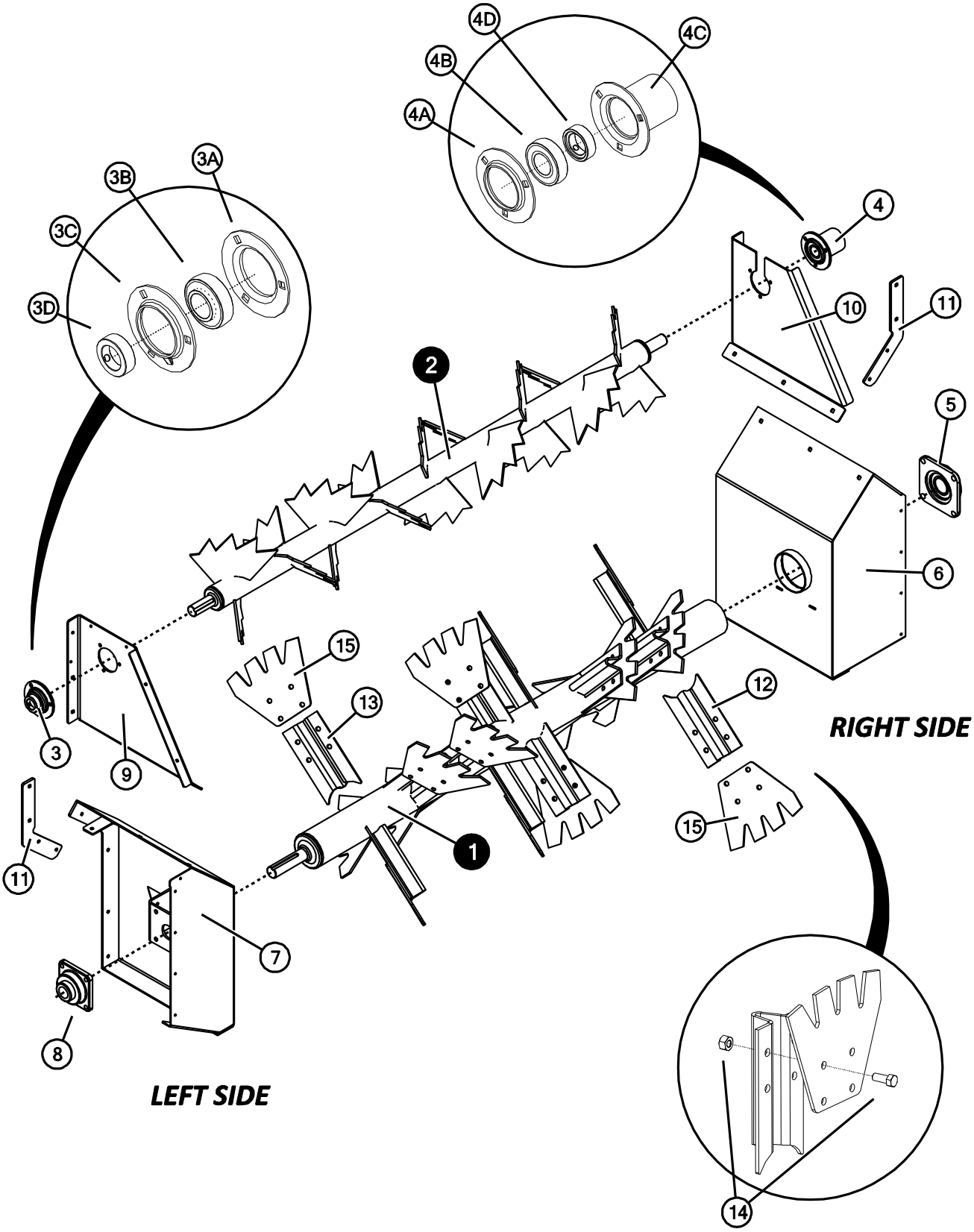

BEATERS & RELATED PARTS

KEY	PART NO.	QTY.	DESCRIPTION
1	E30266	1	MAIN BEATER ASSEMBLY w/ WELD-ON EARS (No Paddles)
2	E02125	1	TOP BEATER ASSEMBLY w/ WELD-ON PADDLES
3	E01973	1	BEARING ASSEMBLY w/ FLANGES, Ø1-3/8" x 72MM
3A	E01805	-	BEARING FLANGE, 72MM, PLAIN
3B	E01977	-	BEARING, GRA106RRB, Ø1-3/8", 72MM OD
3C	E01804	-	BEARING FLANGE, 72MM, GREASE ZERK
3D	REF	-	COLLAR (Not Sold Separately)
4	E01987	1	BEARING ASSEMBLY w/ FLANGES & GUARD, Ø1-3/8" x 72MM
4A	E01805	-	BEARING FLANGE, 72MM, PLAIN
4B	E01977	-	BEARING, GRA106RRB, Ø1-3/8", 72MM OD
4C	E01974-1375	-	BEARING FLANGE w/ GUARD, WELDMENT
4D	REF	-	COLLAR (Not Sold Separately)
5	E00261-07	1	BEARING ASSEMBLY, SCJ 2"
6	E30231R	1	BEATER BRACKET ASSEMBLY, RH
7	E30231L	1	BEATER BRACKET ASSEMBLY, LH
8	E02131	1	BEARING ASSEMBLY, TCJ 1-1/2"
9	E30240L	1	TOP BEATER BRACKET, LH
10	E30240R	1	TOP BEATER BRACKET, RH
11	E30241	2	BRACE, TOP BEATER BRACKET
12	E01985-11	8	BEATER EAR, WELD-ON, RH
13	E01984-11	8	BEATER EAR, WELD-ON, LH
14	E01986	16	BOLT & NUT, Ø1/2" x 1-1/4" GR5
15	E30086	16	PADDLE, BOLT-ON

GEARBOX – BEATER DRIVE

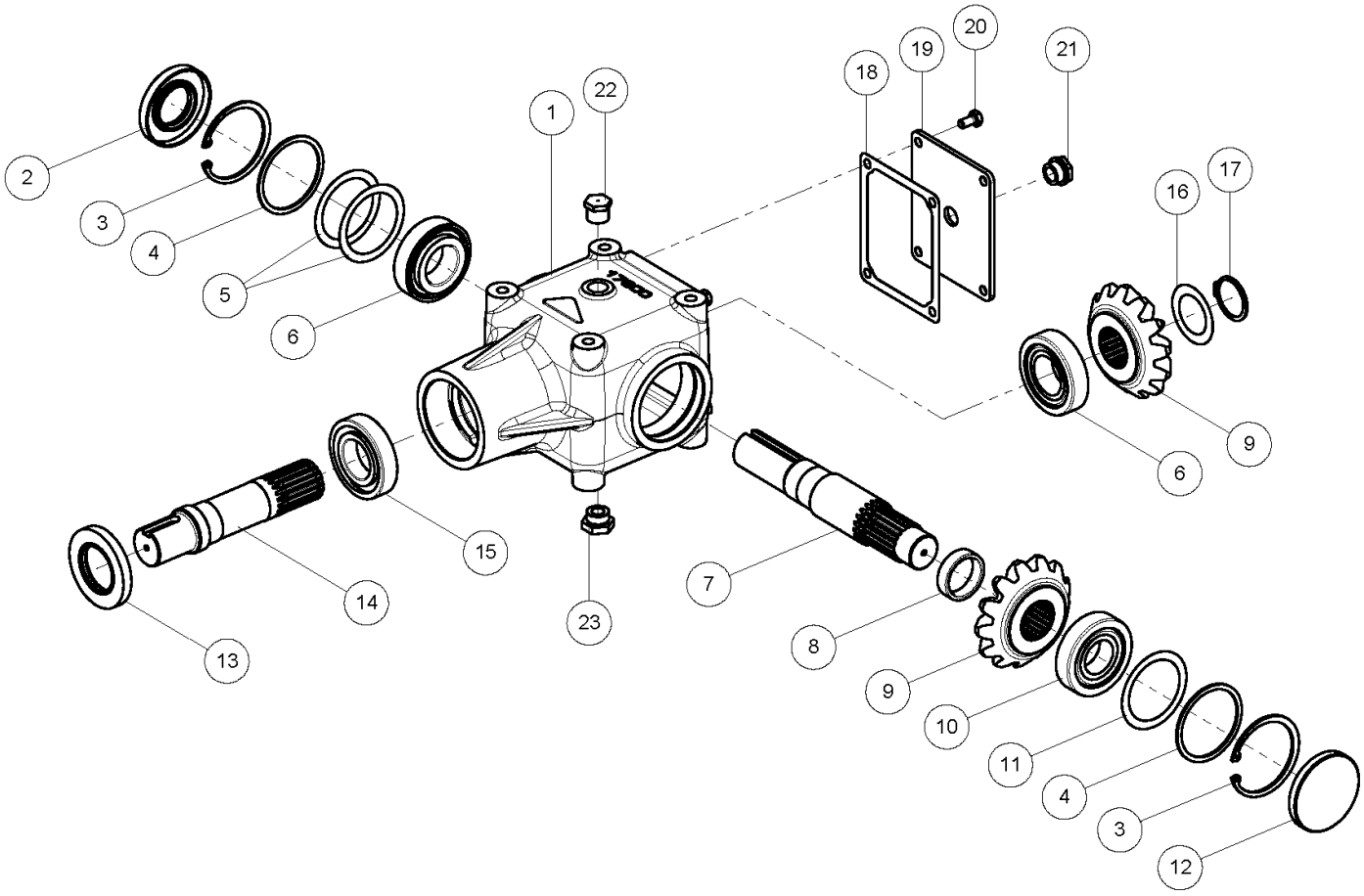

GEARBOX – BEATER DRIVE

KEY	PART NO.	QTY.	DESCRIPTION
REF	**E30160**	**1**	**GEARBOX, COMPLETE, RA70-17750**
1	17600	1	HOUSING, RA70
2	17893	1	OIL SEAL, 40/80/10-DL
3	3435	2	CIRCLIP, I 80
4	17780	2	SPACER, 70X80X2
5	17728	2	SPACER, 63X80X0,2
6	17847	2	BEARING, 32208
7	17778	1	OUTPUT SHAFT
8	17779	1	SPACER
9	17773	2	BEVEL PINION, Z=13
10	10693	1	BEARING, 30307
11	17852	1	SPACER, 63X80X0,1
12	8243	1	PLUG, Ø80MM
13	17894	1	OIL SEAL, 45/80/10-DL
14	17777	1	INPUT SHAFT
15	10509	1	BEARING, 6208
16	17851	1	SPACER, 40X50X0,1
17	3426	1	CIRCLIP, E 40
18	17771	1	GASKET
19	17770	1	COVER
20	3284	4	SCREW, HEX-HD, M8X16
21	9994	1	OIL LEVEL INDICATOR, Ø1/2”
22	9706	1	OIL BREATHER PLUG, Ø1/2”
23	9707	1	OIL PLUG, Ø1/2”

APRON & RELATED PARTS

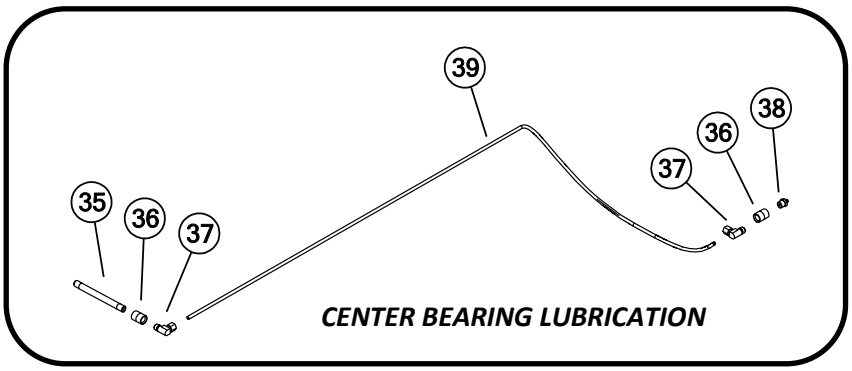

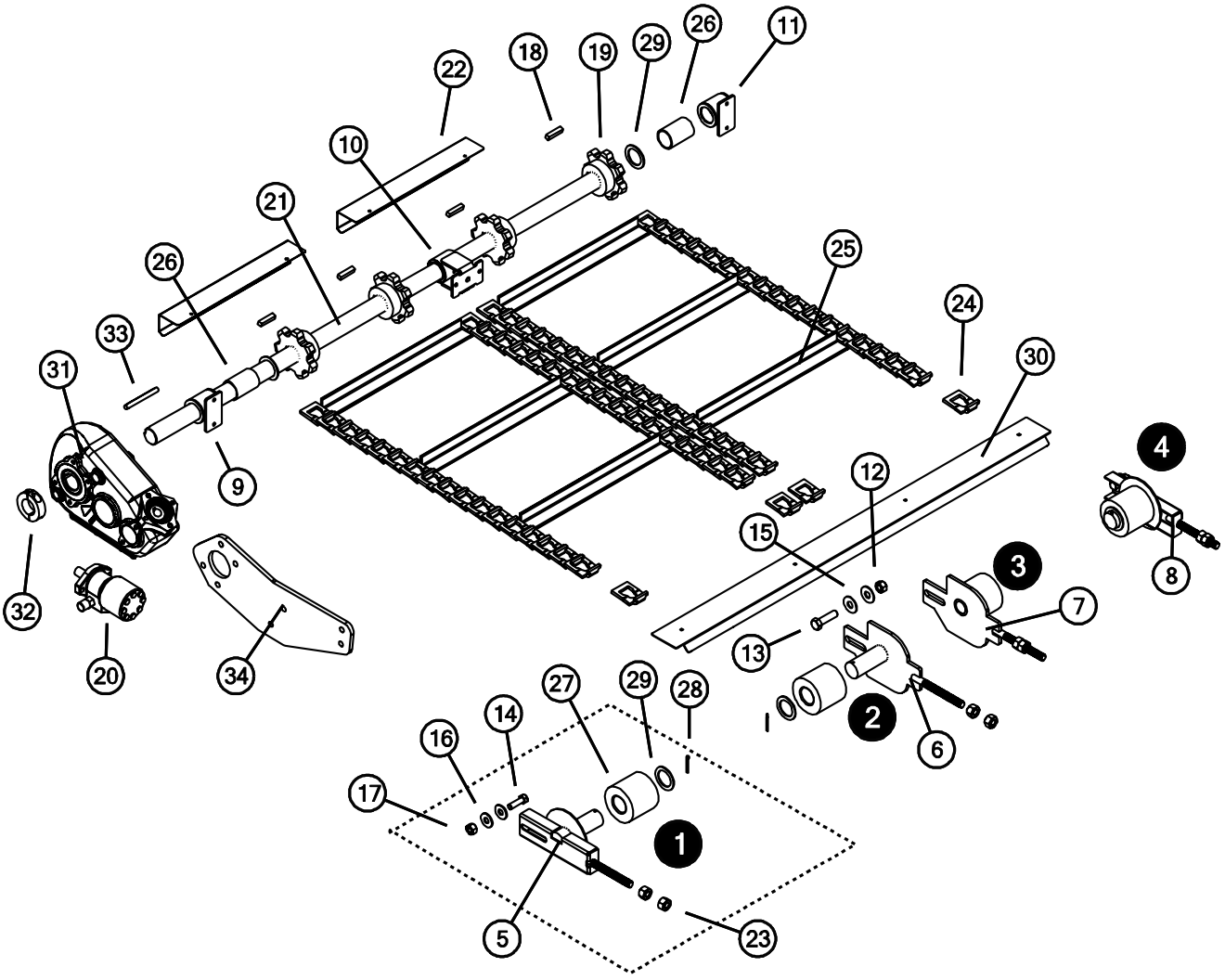

APRON & RELATED PARTS

KEY	PART NO.	QTY.	DESCRIPTION
REF	**E02026-435**	**2**	**APRON, ONE SIDE COMPLETE (21 SLATS / 254 LINKS)**
1	**E02038-375**	**1**	**TIGHTENER KIT, COMPLETE, RH**
2	**E02032**	**1**	**TIGHTENER KIT, COMPLETE, RH CENTER**
3	**E02033**	**1**	**TIGHTENER KIT, COMPLETE, LH CENTER**
4	**E02039-375**	**1**	**TIGHTENER KIT, COMPLETE, LH**
5	E02024-375	1	TIGHTENER WELDMENT, RH
6	E02040	1	TIGHTENER WELDMENT, RH CENTER
7	E02031	1	TIGHTENER WELDMENT, LH CENTER
8	E2037-375	1	TIGHTNER WELDMENT, LH
9	E02017R	1	APRON BEARING, WELDMENT, 2” SHAFT, RH
10	435-52	1	APRON BEARING, WELDMENT, 2” SHAFT, CENTER
11	E02017L	1	APRON BEARING, WELDMENT, 2” SHAFT, LH
12	REF	1	NUT, 3/4-10, NYLOCK
13	REF	1	HCS, 3/4-10 x 2-3/4”
14	REF	2	HCS, 5/8-11 x 2”
15	REF	2	WASHER, PLAIN, 3/4"
16	REF	4	WASHER, PLAIN, 5/8”
17	REF	2	NUT, 5/8-11, NYLOCK
18	E00238	4	KEY, 1/2” x 2-1/4”
19	E00242-00	4	SPROCKET, APRON, #67, 7 TOOTH
20	E00509-440	1	HYDRAULIC MOTOR, 255160A1912ACAAA
21	E01501-435	1	APRON SHAFT, Ø2” x 73-3/8” L
22	E02015-435	2	APRON SHAFT SHIELD
23	E02020	8	NUT, 3/4" NC
24	E02027	508	LINK, #67P11
25	E02028-435	42	SLAT, #67P11, 27” OA
26	E02029-10	2	APRON SHAFT SPACER, 3-7/16”
27	E02034	4	ROLLER, NYLON, Ø4-1/2”
28	E02035	4	COTTER PIN
29	E20728	6	SHAFT WASHER, 2”
30	E30088	1	FRONT FLOOR HOLD DOWN / APRON RAMP
31	VB-00061-440	1	GEAR REDUCER, RT350, Cod. 14552 (See Separate Listing)
32	VB-00155	1	SHAFT COLLAR, SPLIT, Ø 2”
33	VB-00181	1	KEY, 1/2” x 1/2" x 5”
34	VB-500-10	1	GEARBOX TORQUE ARM / MOUNT
35	66406	1	PIPE NIPPLE, 1/8” NPT x 4” BLK
36	66270	2	COUPLING, 1/8” NPT BLK
37	VB-00031	2	BCMP 90° ELBOW, 3/16”T x 1/8”NPT, 440455-131280
38	60102	3	GREASE ZERK, 1/8” NPT
39	REF	1	COPPER TUBING, 3/16” (Order by the Foot)

GEARBOX – APRON DRIVE

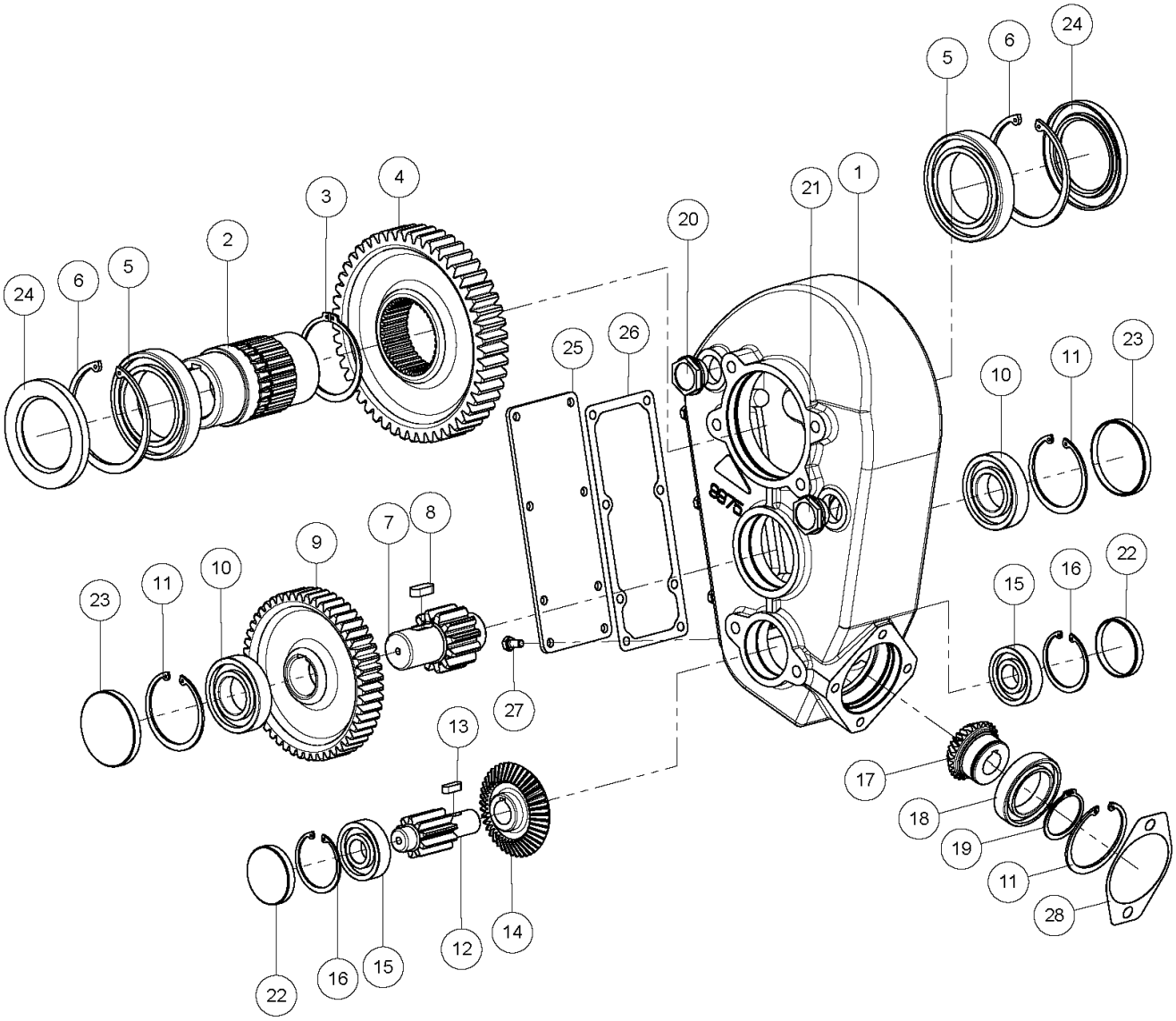

GEARBOX – APRON DRIVE

KEY	PART NO.	QTY.	DESCRIPTION	REF NO.
REF	**VB-00061-440**	**1**	**GEAR REDUCER, RT350, COMPLETE**	**14552**
1	VB-00032-440	1	HOUSING RT350	9975
2	VB-00033-440	1	HUB	14551
3	VB-00034-440	1	CIRCLIP E 82	9918
4	VB-00035-440	1	GEAR Z=49	9974
5	VB-00036-440	2	BEARING 6015	9982
6	VB-00037-440	2	CIRCLIP I 115	9984
7	VB-00038-440	1	PINION Z=12	8670-5
8	VB-00039	2	KEY 12 X 8 X 30	4174
9	VB-00040-440	1	GEAR Z=50	8670-4
10	VB-00041-440	2	BEARING 6208	3342
11	VB-00042	3	CIRCLIP I 80	3435
12	VB-00043-440	1	PINION Z=10	8670-3
13	VB-00044	1	KEY 8 X 7 X 25	3396
14	VB-00045	1	GEAR Z=43	8670-2
15	VB-00047	2	BEARING 6305	8596
16	VB-00048	2	CIRCLIP I 62	3433
17	VB-00049	1	PINION Z=28	8670-1
18	VB-00050	1	BEARING	1538
19	VB-00051	1	CIRCLIP E 50	3428
20	VB-00052	2	OIL PLUG Ø1" GAS	9175
21	VB-00053	2	OIL LEVEL INDIC Ø1" GLASS	1831
22	VB-00054	2	PLUG	8625
23	VB-00055	2	PLUG	8243
24	VB-00056-440	2	OIL SEAL 75/115/10	9983
25	VB-00058	1	COVER	9976
26	VB-00057-9977	1	GASKET	9977
27	VB-00059	8	SCREW HEX-HD M8 X 16	3284
28	VB-00060	1	GASKET	8671

AXLES, WHEELS, SPINDLES & RELATED PARTS

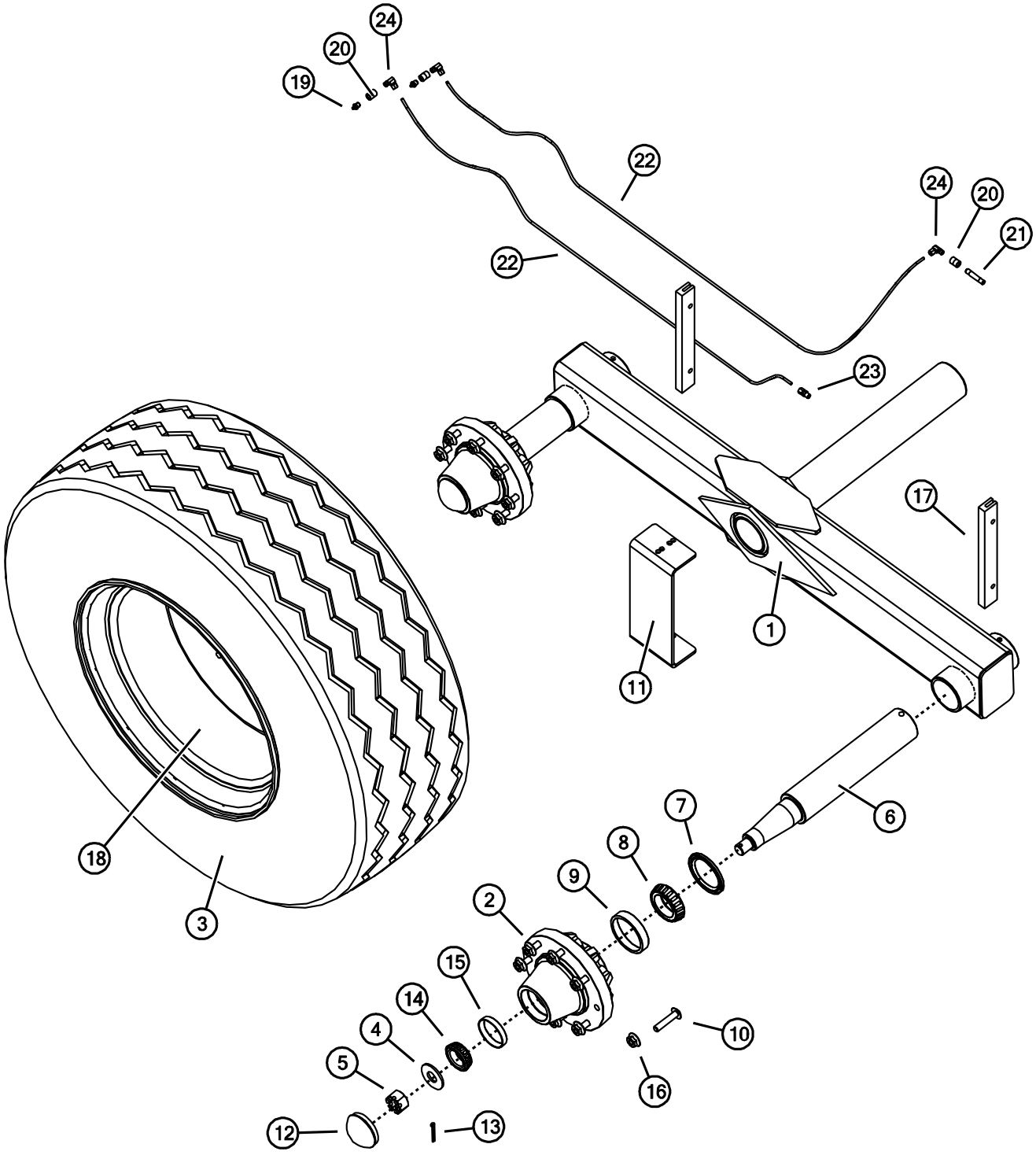

AXLES, WHEELS, SPINDLES & RELATED PARTS

KEY	PART NO.	QTY.	DESCRIPTION	REF NO.
1	E00120-08	2	ARM ASSEMBLY, 3" SPINDLE MOUNT	-
2	E00151	4	HUB, G75-8 w/ CUPS AND STUDS	G281189
3	REF	4	TIRE, 425 / 65 R22.5 (STANDARD)	-
	REF	4	TIRE, 19L X 16.1, 10 PLY (OPTIONAL FLOTATION)	-
4	E00128	4	WASHER, 1" FLAT	G913624
5	E00129	4	NUT, SPINDLE	G912959
6	E00146-00	4	SPINDLE, Ø 3" X 20", G281911L20.000C-SP	-
7	E00147	4	SEAL, HUB	G946486
8	E00148	4	BEARING, INSIDE, 387-AS	G910359
9	E00149	4	BEARING CUP, INSIDE, 382A	G910358
10	E00159	32	STUD, WHEEL	G943541
11	E01156	2	AXLE RETAINER	-
12	E01679	4	DUST CAP	G909912
13	E01685	4	COTTER PIN	G905942
14	E01689	4	BEARING, OUTSIDE, LM501349	G910273
15	E01691	4	BEARING CUP, OUTSIDE, LM501310	G910275
16	E01699	32	NUT, STUD	G913557
17	E01700	4	GUIDE, POLY, 2-HOLE	-
18	E22142	4	WHEEL, 22.5 X 13.5, FOR 425/65 R22.5 TIRE (STANDARD)	-
	E00135-16	4	WHEEL, 16.1 X W16C, FOR 19L X 16.1 TIRE (OPTIONAL)	-
19	60102	4	GREASE ZERK, 1/8" NPT	-
20	66270	6	COUPLING, 1/8" NPT BLK	-
21	66402	2	PIPE NIPPLE, 1/8" NPT x 2" BLK	-
22	REF	4	COPPER TUBING, 3/16" (Order by the Foot)	-
23	VB-00030	2	BCMP CONNECTOR, 3/16"T x 1/8" NPT, 440421-131280	-
24	VB-00031	6	BCMP 90° ELBOW, 3/16"T x 1/8" NPT, 440455-131280	-

HYDRAULIC END GATE & RELATED PARTS

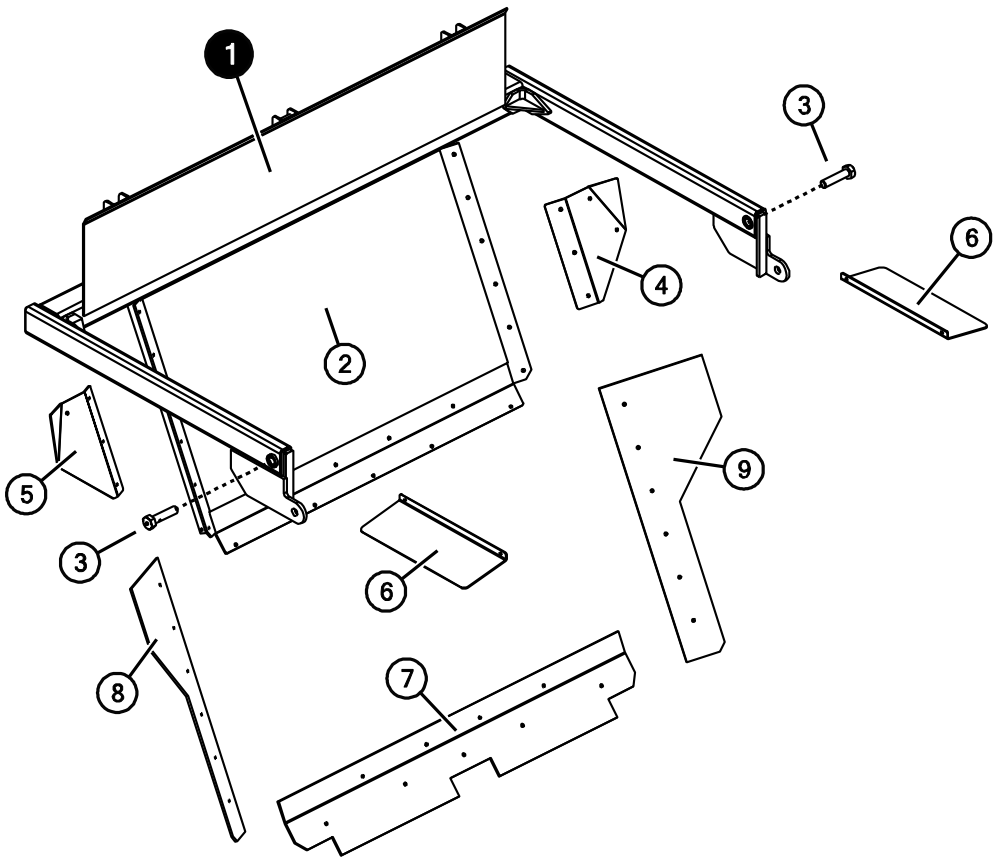

KEY	PART NO.	QTY.	DESCRIPTION
1	E01558-10	1	END GATE ASSEMBLY, FRAME & ARMS w/ POLY INSERT
2	E20128-435	1	POLY INSERT, 1/2” x 29-1/2” x 53”
3	E30330	2	GATE PIVOT BOLT, w/ GREASE ZERK, Ø1” x 4-1/4”L
4	435-21L	1	GATE FLARE BELT SUPPORT, LH
5	435-21R	1	GATE FLARE BELT SUPPORT, RH
6	435-23	2	CYLINDER GUARD
7	435-26	1	GATE BELTING, BOTTOM, 10” x 60-1/2”
8	435-27R	1	BELTING, RH SIDE
9	435-27L	1	BELTING, LH SIDE

PTO DRIVELINE ASSEMBLY w/ OVER-RUNNING CLUTCH

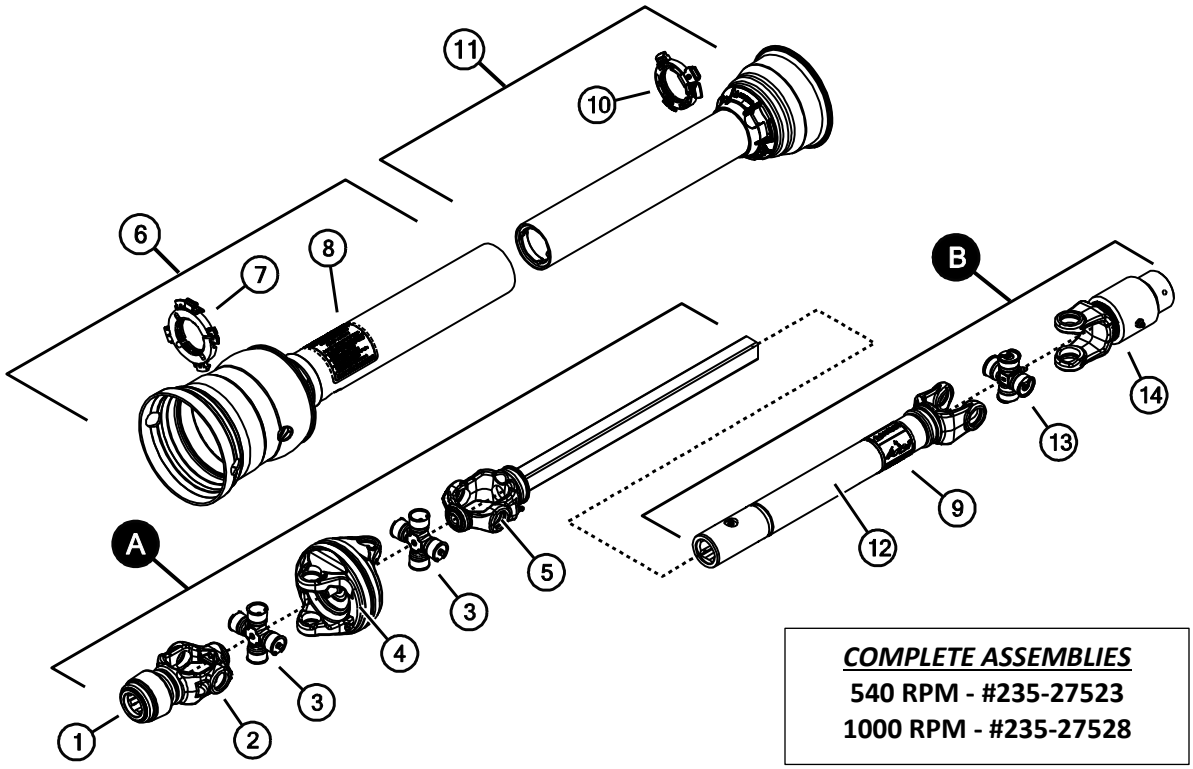

COMPLETE ASSEMBLIES
540 RPM - #235-27523
1000 RPM - #235-27528

KEY	PART NO.	QTY.	DESCRIPTION
A	93-27469	1	JOINT & SHAFT HALF w/ GUARD, **540 RPM**
	95-27469	1	JOINT & SHAFT HALF, **540 RPM**
	93-27470	1	JOINT & SHAFT HALF w/ GUARD, **1000 RPM**
	95-27470	1	JOINT & SHAFT HALF, **1000 RPM**
B	92-27523	1	JOINT & TUBE HALF w/ GUARD
	94-27523	1	JOINT & TUBE HALF
1	26-15120	1	REPAIR KIT, SSL/AUTO-LOK
2	31005-1016	1	YOKE, 3 80 WWCV, AUTO-LOK, **540 RPM**
	31005-1019	1	YOKE, 3 80 WWCV, AUTO-LOK, **1000 RPM**
3	03-11388	2	CROSS KIT, 3 80RBL WWCV
4	26-15147	1	CENTER HOUSING, 3 80 WWCV
5	99-27469	1	YOKE & SHAFT
6	97-27469	1	OUTER GUARD
7	19-15126	1	GUARD REPAIR KIT (Nylon Bushing & Easy-Lock Tab)
8	13-10021	1	SAFETY SIGN
9	13-10022	1	SAFETY SIGN
10	19-11146	1	GUARD REPAIR KIT (Nylon Bushing & Easy-Lock Tab)
11	96-27469	1	INNER GUARD
12	98-27469	1	YOKE, TUBE, & SLIP SLEEVE
13	03-10134	1	CROSS KIT, 14R
14	39-10219	1	OVERRUNNING CLUTCH, 14
REF	19-16659	AR	REPAIR KIT, OVERRUNNING CLUTCH

HIGHWAY LIGHTING AND WIRING

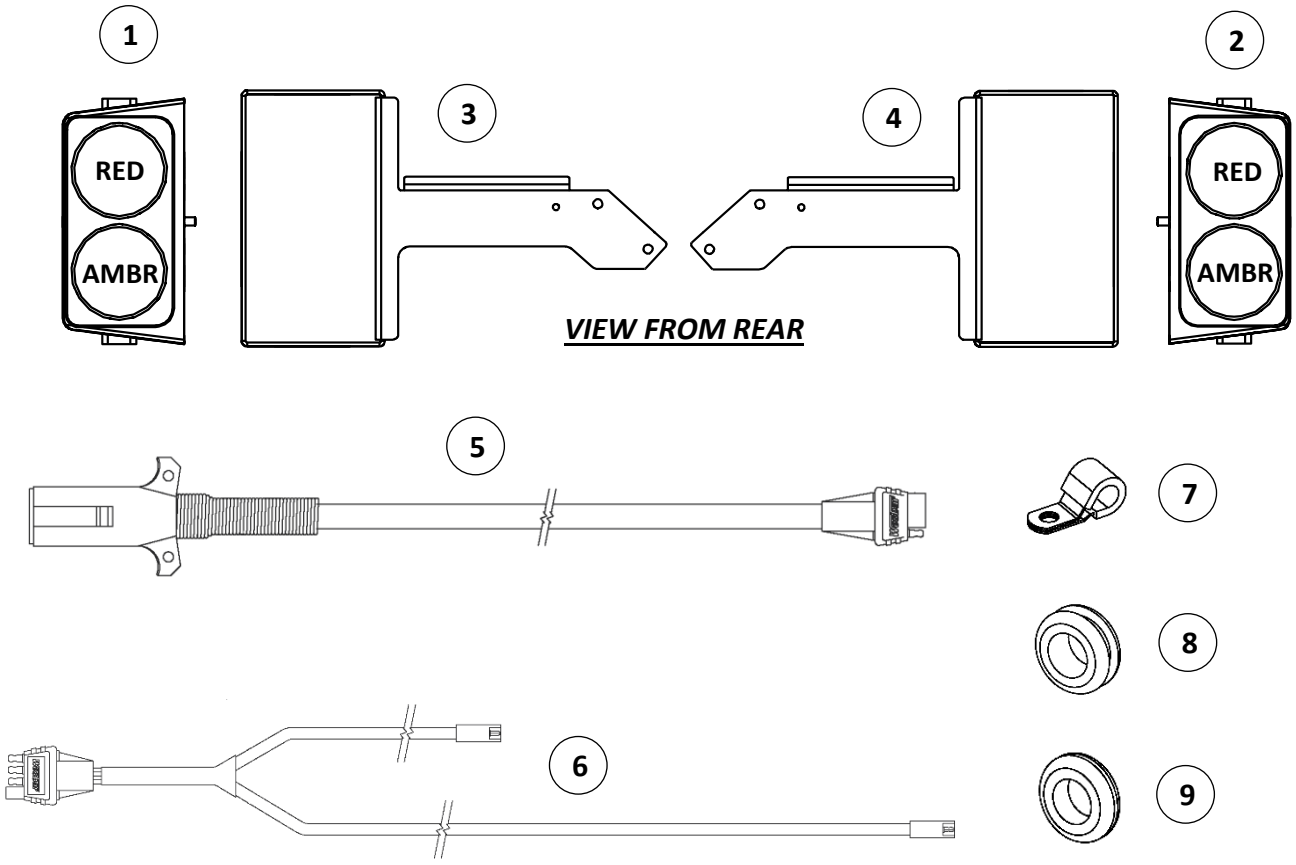

KEY	PART NO.	QTY.	DESCRIPTION
1	54209-006	1	DUAL LIGHT, LEFT
2	54209-020	1	DUAL LIGHT, RIGHT
REF	802651	2	RED LENS
REF	802650	4	AMBER LENS
3	E30090L	1	LIGHT BRACKET w/ GUARD, LH
4	E30090R	1	LIGHT BRACKET w/ GUARD, RH
5	E30129-1	1	HARNESS, FRONT, 4-FLAT to 7-PIN PLUG, 120050-334
6	E30129-2	1	HARNESS, REAR, 2x 3-PIN to 1x 4-FLAT, 120050-335
REF	E30129	1	WIRE HARNESS KIT, 54003-149 (Both Harnesses)
7	200609	AR	WIRE LOOM CLAMP, Ø3/8”
8	E30314	2	GROMMET, 1/4" PT, 9307K71
9	E30322	1	GROMMET, 1/16” PT, 9600K55

JACK ASSEMBLY & RELATED PARTS

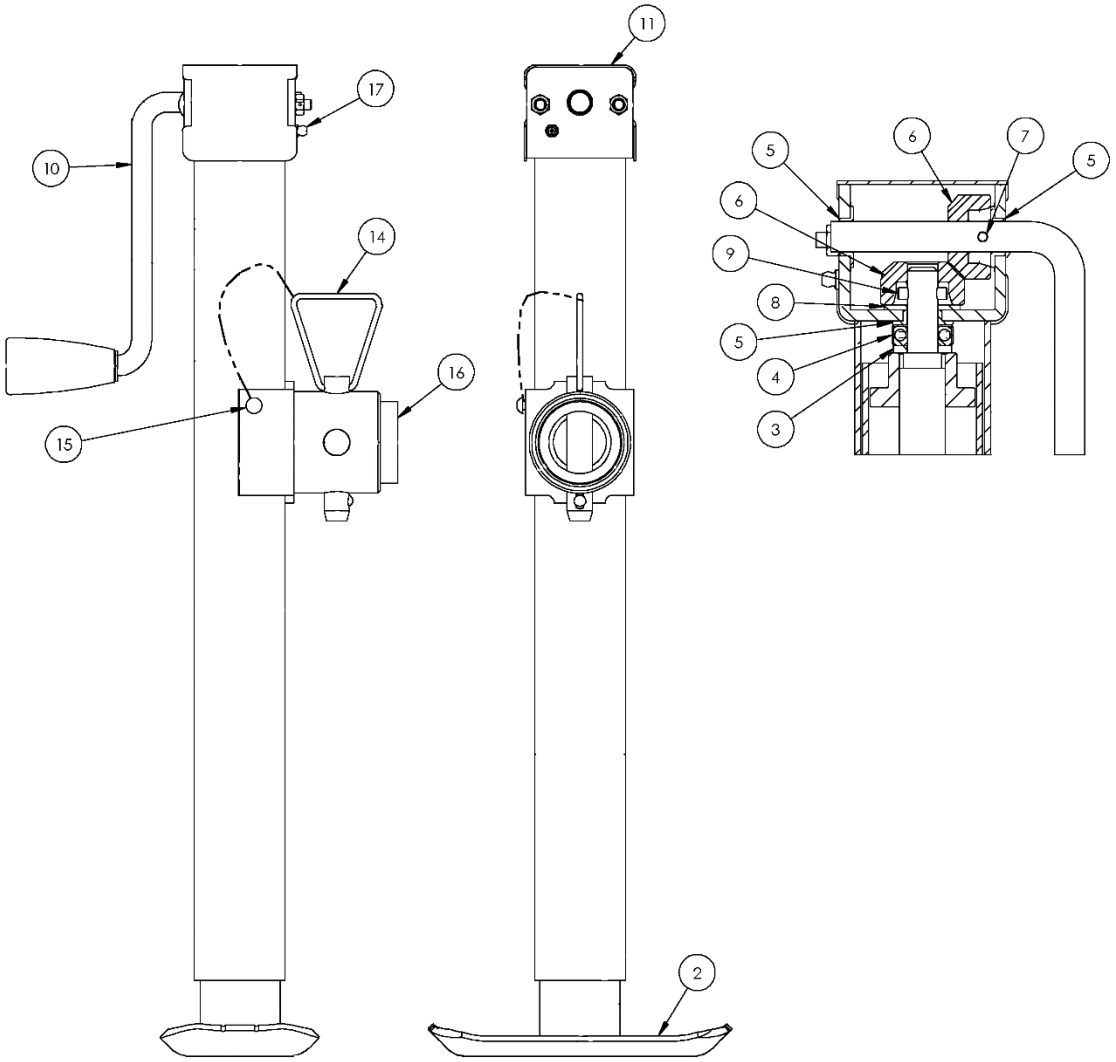

KEY	PART NO.	QTY.	DESCRIPTION	REF NO.
REF	**E01956**	**1**	**JACK ASSEMBLY, COMPLETE, 5000 LB**	**195356**
1	E01956-1	1	OUTER TUBE & MOUNT	709598
2	E01956-2	1	INNER TUBE/S&N ASSY	710734
3	E01956-3	1	WASHER, SUPPORT	016129
4	E01956-4	1	BEARING, THRUST-2K/3K ENCLOSED	001016
5	E01956-5	3	BUSHING, FLANGE-1” FLNG PM	017011
6	E01956-6	2	BEVEL GEAR, Ø1.38”	020001
7	E01956-7	1	GROOVE PIN, 5/32”	009008
8	E01956-8	1	WASHER, FLAT-.080 THK	016119
9	E01956-9	1	SOLID PIN, 3/16 x .810 LG	009054
10	E01956-10	1	ASSEMBLY, SW CRANK (6.5)	700056
11	E01956-11	1	COVER, GEARBOX	016041
14	E01956-14	1	PULL PIN & CHAIN, 5/8” x 3.5” LG	700005
15	E01956-15	1	DRIVE SCREW, NO. 12	015625
16	E01961	2	MOUNT TUBE, WELD-ON	015279
17	E01956-17	1	GREASE FITTING – SW	015227

HYDRAULIC SYSTEM PARTS – APRON DRIVE

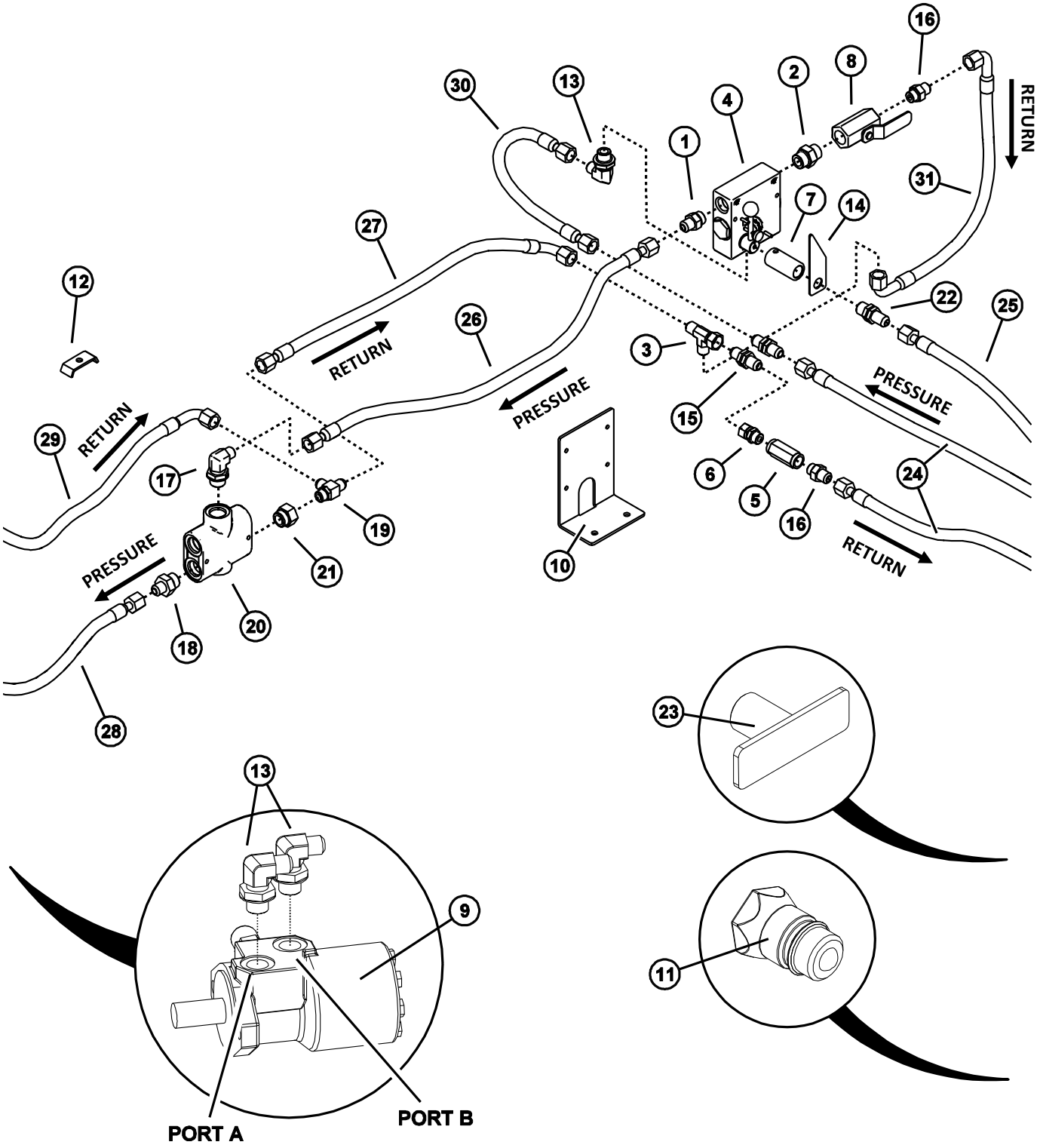

PORT A – PRESSURE, IN
PORT B – RETURN, OUT

HYDRAULIC SYSTEM PARTS – APRON DRIVE

KEY	PART NO.	QTY.	DESCRIPTION
1	E00484-00	1	ADAPTER, M-JIC to M-ORB, 6400-8-10
2	E00485-00	1	ADAPTER, UNION, 6403-10-8
3	E00485-09	1	ADAPTER TEE, M-JIC x 2 to FM-JIC SWIVEL, 6602-8
4	E00486-00	1	VALVE, MANUAL FLOW CONTROL, RD1910-16
5	E00489-00	1	CHECK VALVE, LTF-8-OW
6	E00495-09	1	ADAPTER, M-ORB to FM-JIC SWIVEL, 6402-8-8
7	E00496	1	CONNECTOR SLEEVE, TWIST HOSE
8	E00497-00	1	BALL VALVE, 72-903
9	E00509-440	1	HYDRAULIC MOTOR, 255160A1912ACAAA
10	E01321-16	2	VALVE MOUNT BRACKET
11	E01591	2	QUICK COUPLER, 8010-4P
12	E02119	7	HOSE CLAMP
13	E21442	3	ADAPTER, 90°, M-JIC to M-ORB, 6801-8-10
14	E21443	1	SPEED CONTROL POINTER
15	E21445	2	BULKHEAD UNION, 2700-LN-08
16	E21447	2	ADAPTER, M-ORB to M-JIC, 6400-8-8
17	E21449	1	ADAPTER, 90°, M-JIC to M-ORB, 6801-8-12
18	E21450	1	ADAPTER, M-JIC to M-ORB, 6400-8-12
19	E21452	1	TEE, 6804-8-8-8
20	E21456	1	VALVE, PFC, BG5-7.5-12SAE
21	E21458	1	ADAPTER, REDUCER, 6410-12-8
22	E30329	1	BULKHEAD UNION, 2706-LN-08
23	E00495	1	FLOW CONTROL HANDLE
24	REF	2	HYDRAULIC HOSE, 8M3K-8FJX-8MP, 92” (To Tractor)
25	REF	1	TWIST HOSE, FLOW CONTROL, 8G2-8FJX-8MP, 112”
26	REF	1	HYDRAULIC HOSE, 8M3K-8FJX-8FJX, 36”
27	REF	1	HYDRAULIC HOSE, 8M3K-8FJX-8FJX90S, 34”
28	REF	1	HYDRAULIC HOSE, 8M3K-8FJX-8FJX, 197” (To Motor, IN)
29	REF	1	HYDRAULIC HOSE, 8M3K-8JX-8FJX90S, 200” (To Motor, OUT)
30	REF	1	HYDRAULIC HOSE, 8M3K-8FJX-8FJX, 20”
31	REF	1	HYDRAULIC HOSE, 8M3K-8FJX90S-8FJX90S, 24”

HYDRAULIC HOSES MADE TO ORDER, USE DESCRIPTION WHEN ORDERING.

HYDRAULIC SYSTEM PARTS – END GATE

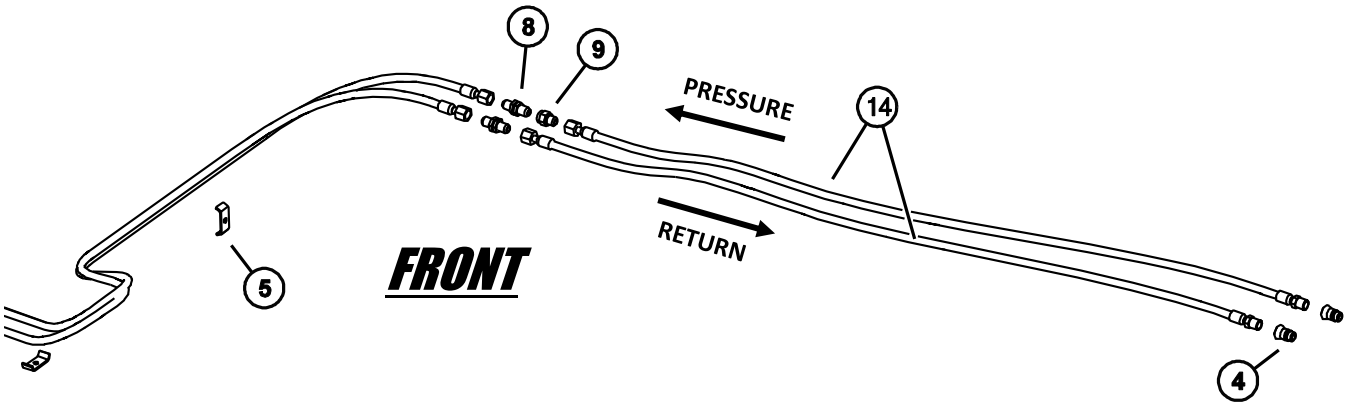

NOTE: FLOW REFERENCES ONLY APPLY FOR RAISING / OPENING END GATE

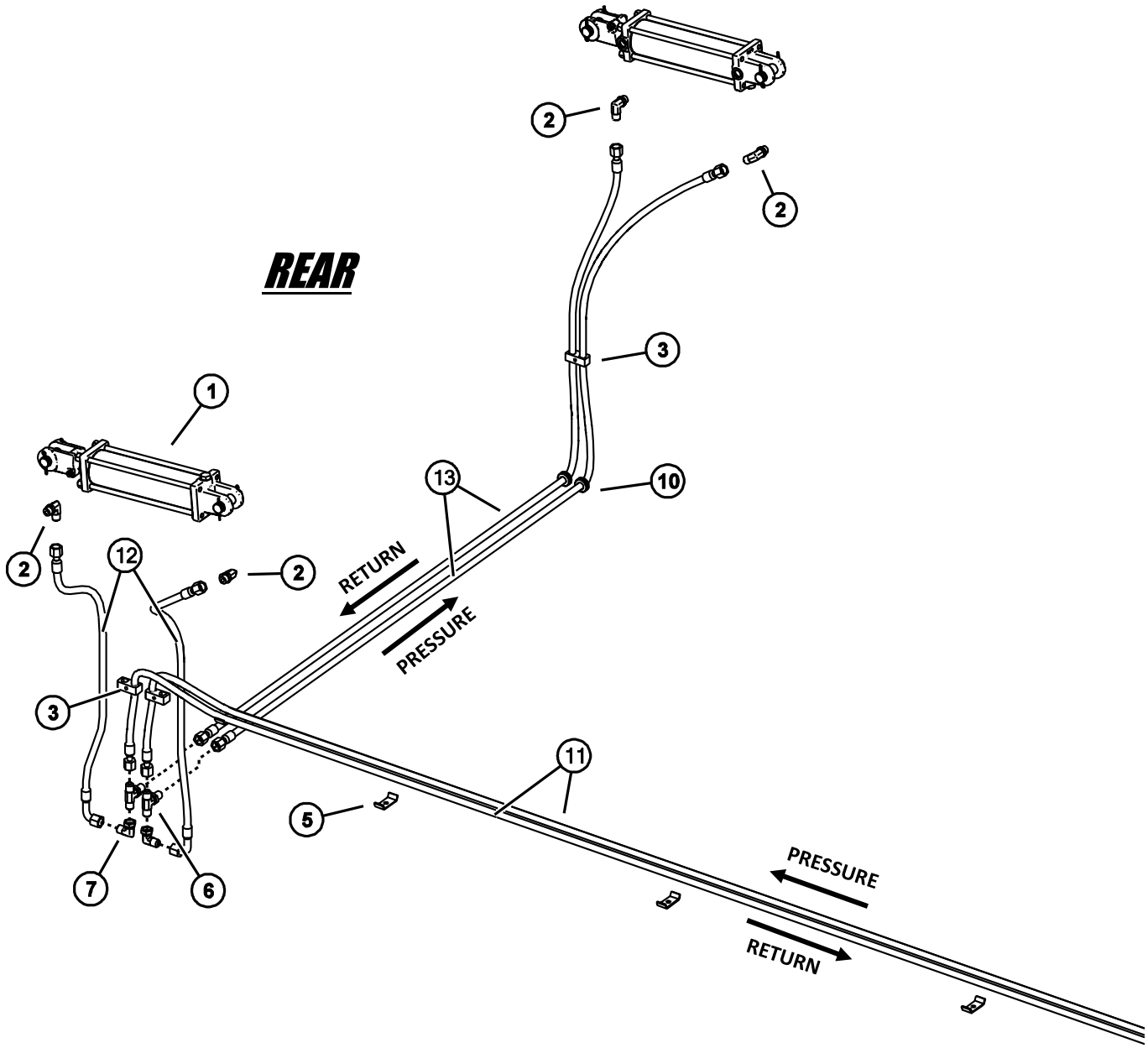

HYDRAULIC SYSTEM PARTS – END GATE

KEY	PART NO.	QTY.	DESCRIPTION
1	E00090-12	2	HYDRAULIC CYLINDER, COMPLETE, 3” x 9-3/4”
2	E00067-04	4	ADAPTER, 90°, M-JIC to M-ORB, 6801-8-8
3	E00079	AR	HOSE CLAMP, 5/8”, 6M3K
4	E01591	2	QUICK COUPLER, 8010-4P
5	E02119	6	HOSE CLAMP
6	E20328	2	BULKHEAD TEE, M-JIC x 3, 2703-LN-8
7	E20329	2	ADAPTER, 90°, M-JIC to FM-JIC SWIVEL, 6500-8
8	E21445	2	BULKHEAD UNION, 2700-LN-08
9	E30064	1	RESTRICTOR, 2406-8-8, R.078
10	E30314	2	GROMMET, 1/4” PT, 9307K71
11	REF	2	HYDRAULIC HOSE, 6M3K-8FJX-8FJX, 202”
12	REF	2	HYDRAULIC HOSE, 6M3K-8FJX-8FJX90S, 45”
13	REF	2	HYDRAULIC HOSE, 6M3K-8FJX-8FJX, 104”
14	REF	2	HYDRAULIC HOSE, 6M3K-8FJX-8FJX, 102” (To Tractor)
HYDRAULIC HOSES MADE TO ORDER, USE DESCRIPTION WHEN ORDERING.			

LIMITED WARRANTY STATEMENT

Meyer's Equipment Mfg. Corp. warrants each new Meyer's E.M.C. product to be free from defects in material and workmanship. This warranty is applicable only for the normal service life expectancy of the product or components, not to exceed 12 consecutive months from the date of delivery of the new Meyer's E.M.C. product to the original purchaser.

Genuine Meyer's E.M.C. replacement parts and components will be warranted for 365 days from date of purchase, or the remainder of the original equipment warranty period, whichever is longer.

Under no circumstances will it cover any merchandise or components thereof, which, in the opinion of the company, has been subjected to misuse, unauthorized modifications, alteration, and accident or if repairs have been made with parts other than those obtainable through Meyer's E.M.C.

Our obligation under this warranty shall be limited to repairing or replacing, free of charge to the original purchaser, any part that, in our judgment, shall show evidence of such defect, provided further that such part shall be returned within thirty (30) days from date of failure to Meyer's E.M.C., routed through the dealer and distributor from whom the purchase was made, transportation charges prepaid. Labor charges will be paid at a specified rate. Mileage will not be paid.

This warranty shall not be interpreted to render Meyer's E.M.C. liable for injury or damages of any kind or nature to person or property. This warranty does not extend to the loss of crops, loss because of delay in harvesting, or any expense or loss incurred for labor, substitute machinery, rental or for any other reason.

In addition to the above limited warranty statement the following applies:

Meyer's E.M.C. will replace (F.O.B. Dorchester) as Meyer's E.M.C. elects, for 10 years from purchase date - any polyethylene plastic boards which compromises the floor, sides, rear or front of the box portion of the manure spreader box (not labor) from rotting under normal usage to the original owner.

Except as set forth above, Meyer's E.M.C. shall have no obligation or liability of any kind on account of any of its equipment and shall not be liable for special or consequential damages. Meyer's E.M.C. disclaims any implied warranty or merchantability or fitness for a particular purpose. Some states or provinces do no permit limitations or exclusions of implied warranties or incidental or consequential damages, so the limitations or exclusion in this warranty may not apply.